PRODUCT INFORMATION

FLOWSIC600

CUSTODY TRANSFER GAS FLOW MEASUREMENT AND PROCESS MONITORING

Gas flow meters

SICK
Sensor Intelligence.

INVESTING IN A HIGH-QUALITY METER SAVES MONEY

Every day natural gas flows in great quantities through pipelines or into storage facilities, thus changing owners. Precise gas quantity measurement is of the utmost importance, as even very small measurement errors could result in substantial economic loss. In addition, challenging ambient measurement conditions often play a decisive role. Moisture, ice, cold, heat and desert sand place great demands on the instruments in the field. This is why a gas flow meter is needed that is both accurate and reliable.
The FLOWSIC600 gas flow meter from SICK achieves both of these goals. It is ideal for both natural gas custody transfer and the highly precise measurement of process gases in the chemical industry.

Natural gas pipeline in Bawu-Changnan using FLOWSIC600

Highly Durable

The FLOWSIC600 compact gas flow meter hermetically shields all of its measurement equipment from the environment. The use of internal cable routing prevents harsh climate conditions and contamination from harming the device. The FLOWSIC600 is virtually maintenance-free.

High Measurement Accuracy

The FLOWSIC600 measures gas flow using ultrasonic technology. The arrangement of the ultrasonic sensors in the measurement device (path layout) matches its performance parameters perfectly. With the FLOWSIC600, SICK developed ultrasonic sensors designed for maximum immunity to noise.

Maximum Reliability

The FLOWSIC600 uses ultrasonic measurement and operates without mechanically moving parts making it largely resistant to contamination and wear. The result is maximum measurement reliability even under adverse measurement conditions.

Excellent System Integration

The FLOWSIC600 is available for nominal pipe sizes from DN80 to DN1200 for custody transfer applications, and as small as DN50 for process applications. Easy connection to flow computers allows straightforward integration into any measurement station. SICK also provides inlet and outlet sections, flow computers, and pressure and temperature transmitters.

Worldwide Approvals

The FLOWSIC600 conforms to all relevant natural gas guidelines and has worldwide approval.

Low Power Consumption

SICK ultrasonic sensors combine high performance with low power consumption. Due to low power consumption, it is possible to use a stand-alone power supply, such as a solar module.

The FLOWSIC600 is available in four types

Ideal for custody transfer applications

FLOWSIC600, 4-path

- The standard design is equipped with a fourpath system in which the measured values of the individual sensor pairs are averaged.

Ideal for applications having additional monitoring

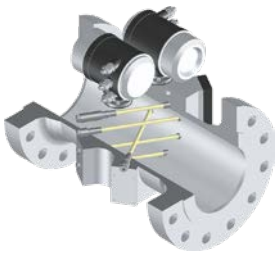

FLOWSIC600 2plex

- The 2plex design provides enhanced diagnostics, combining a custody transfer meter with a check meter.

Ideal for fully redundant measurements

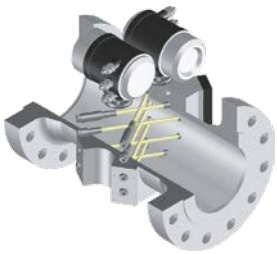

FLOWSIC600 Quatro

- The FLOWSIC600 Quatro provides a redundant solution, integrating two meters into one meter body while retaining the same overall length.

Ideal for process gas measurement and internal billing

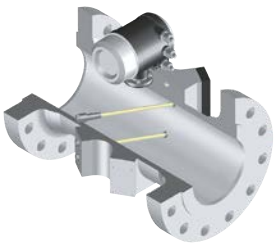

FLOWSIC600, 2-path

- A reliable two-path design provides adequate measurement accuracy in both custody and non-custody applications.

EXCELLENT MEASUREMENT TECHNOLOGY IN AN OUTSTANDING MEASUREMENT DEVICE

The FLOWSIC600 is a top-quality measurement device. It features a robust meter body incorporating measurement equipment, performs measurement with high noise immunity and long-term stability, and is nearly maintenance-free.

Ultrasonic Sensors from SICK

The FLOWSIC600 is equipped with high-performance ultrasonic sensors developed by SICK. A hermetically sealed titanium housing contains ultrasonic transducers that operate at a selectable ultrasonic frequency of 80 kHz, 135 kHz, 200 kHz, or 300 kHz to match the operating conditions.
The sensors can also be deployed at very high or very low temperatures (from –194 °C to +280 °C), at high pressures (up to 450 barg), under corrosive conditions, and with heavy background noise. They exhibit unrivaled reliability in sound-absorbing gases that are high in carbon dioxide.
The FLOWSIC600 features an efficient transducer for performing measurements at atmospheric pressure, allowing calibration using air.

Sensor

Direct Path Layout

The transit time difference principle is used for performing ultrasonic gas flow measurement. This measurement principle uses ultrasonic transit time to determine the gas flow rate. The direct path layout minimizes the influence of turbulence, contamination, moisture, and background noise.
Two ultrasonic sensors are installed opposite each other at a specific angle to the gas flow and operate alternately as a transmitter and receiver.

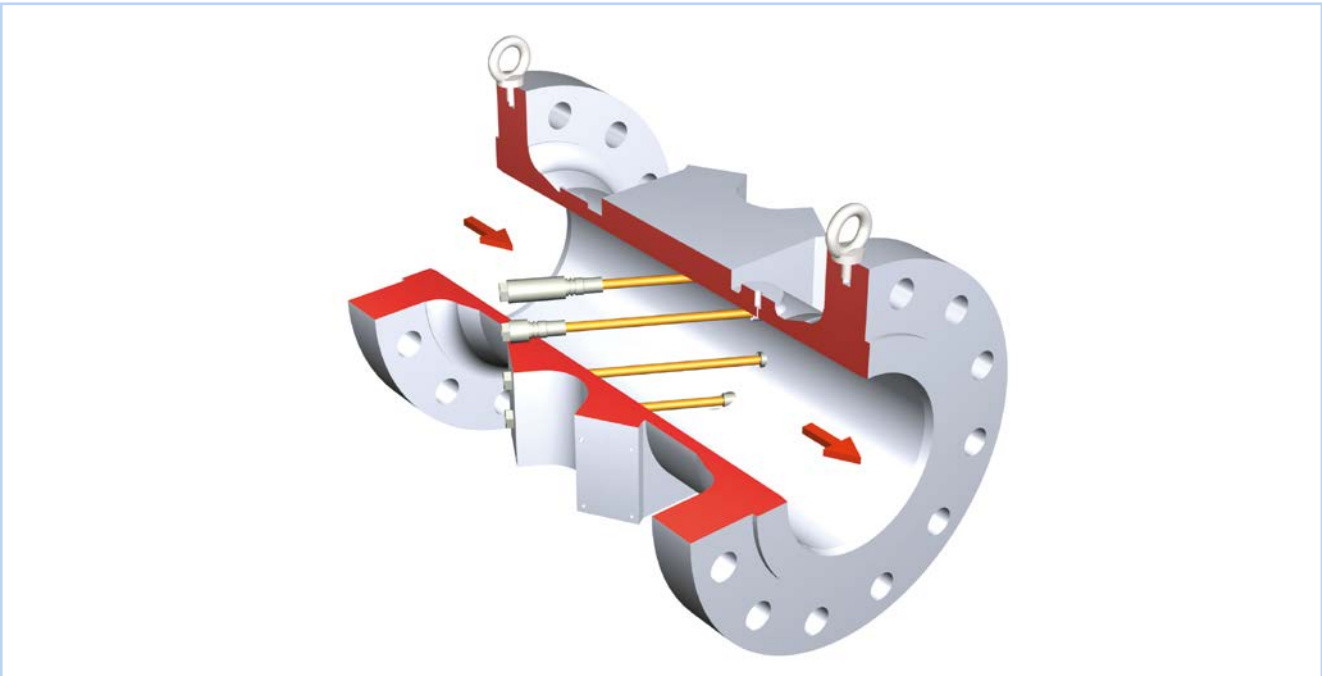

Direct path layout

Automatic Self-Diagnostics

The FLOWSIC600 is equipped with a warning signal that informs the user of a malfunction before the measured value is affected. To do this, current diagnostic indicators are compared to indicators that were learned by the device under normal measurement conditions. The results of the self-diagnostics are permanently logged by an internal electronic data log to allow a retroactive check of the measurement process. Important measured variables such as gas flow and gas velocity (VOG) or diagnostic parameters such as signal-to-noise ratio (SNR) or speed can be read directly.

Operating Software

MEPAFLOW600 CBM operating software allows efficient and effective meter and data management and provides extensive diagnostics options. The software provides simple, user-friendly access to FLOWSIC600 data. MEPAFLOW600 CBM provides permanent online and offline access to the FLOWSIC600. In addition to easy-to-understand visualization, the software supports the user with logs and assistance functions when operating the gas flow meter.

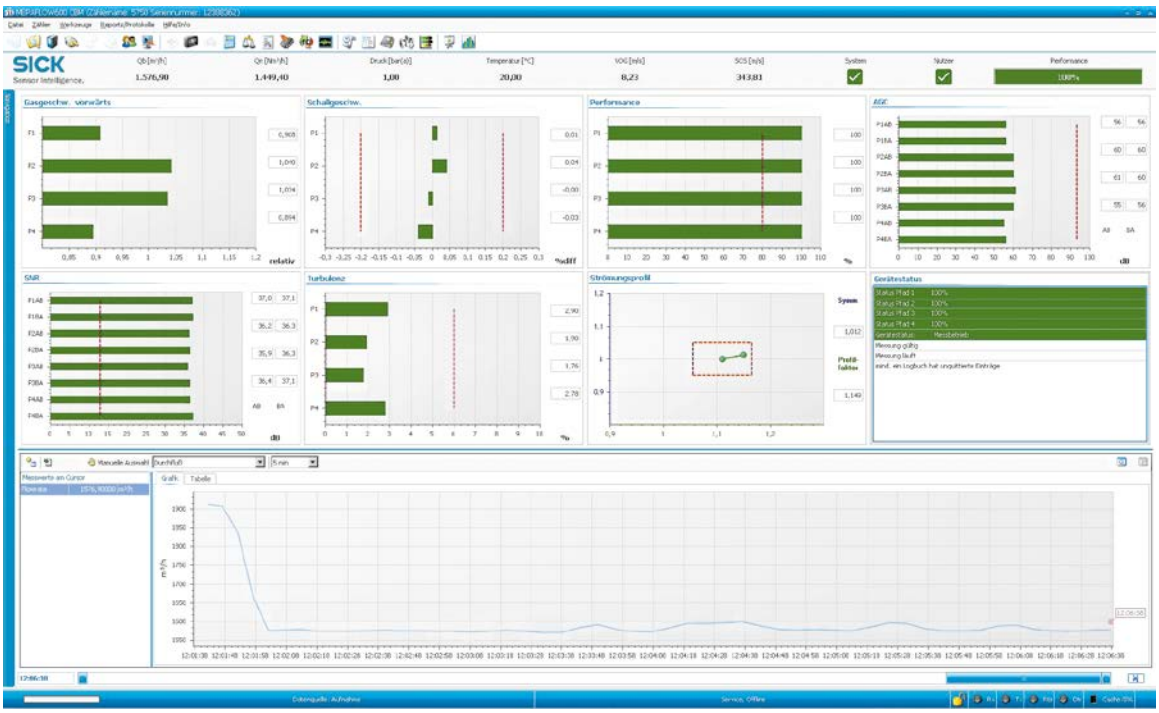

MEPAFLOW CBM

GAS FLOW METERS FOR CUSTODY TRANSFER TRAFFIC AND PROCESS APPLICATIONS

Product description

The FLOWSIC600 measurement device is an ultrasonic gas flow meter and sets the standard in its market segment. The visually technical design demonstrates that it is geared to the tough industry conditions. The compact design with integrated cable routing means that the measuring system is durable, failsafe, low-maintenance, and has long-term stability. The FLOWSIC600 features extensive diagnostics options to allow detection of malfunctions even before the measurement is affected. Types having 2, 4, 4 + 1, or 4 + 4 measuring paths enable a variety of process applications, including custody transfer measurements.

At a glance

- High efficient ultrasonic transducers
- Direct path layout (Westinghouse design)
- Intelligent self-diagnostics
- Compact, robust design
- Integrated log book and data logger
- Large measuring range 1:120
- Bidirectional measurement
- Low power consumption: <1 W

Your benefits

- Long-term stability, reliable measurement
- Low maintenance due to intelligent self-diagnostics
- Virtually immune to pressure regulator noise
- Ultrasonic transducers can be exchanged under operating pressure
- Wide application range

MID

Additional information

→ www.mysick.com/en/FLOWSIC600

For more information, just enter the link and get direct access to technical data, CAD design models, operating instructions, software, application examples and much more.

8009840/2022-11
Subject to change without notice

Fields of application

- Custody transfer applications (natural gas, N_2, O_2, air, ethylene)
- Onshore and offshore applications
- Underground gas storage facilities (bidirectional measurment possible)
- Cryogenic gas applications down to –194 °C
- Also for process gases
- For gases with high H_2S component such as sour gas or biogas

Detailed technical data

The exact device specifications and performance data of the product may deviate from the information provided here, and depend on the application in which the product is being used and the relevant customer specifications.

System

Measured values	Volumetric flow, a. c., volume a. c., gas velocity, sound velocity
Number of measuring paths	2, 4, 4+1, 4+4
Measurement principle	Ultrasonic transit time difference measurement
Measuring medium	Natural gas, air, C_2H_4, steam, process gases (e. g. CO_2 up to 100%, N_2, O_2, Cl_2 etc.), gases like sour gas or bio gas with high H_2S content
Measuring ranges	
Volumetric flow, a. c.	4 ... 400 m³/h / 1,600 ... 100,000 m³/h Measuring ranges depend on nominal pipe size
Repeatability	< 0.1 % of the measured value
Accuracy	
	Error limits
2-path version [1]:	≤ ± 1 %
4-path version [2]:	≤ ± 0.5 % Dry calibrated
4-path version [2]:	≤ ± 0.2 % After flow calibration and adjustment with constant factor
4-path version [2]:	≤ ± 0.1 % After flow calibration and adjustment with polynomial or piecewise correction
	[1] In the range Q_t ... Q_{max} with straight 20D/3D inlet/outlet section or with 10D/3D flow conditioner [2] In the range Q_t ... Q_{max} with undisturbed 10D/3D inlet/outlet section or with 5D/3D flow Conditioner
Diagnostics functions	Integrated device diagnosis and extended diagnosis via MEPAFLOW600 CBM software
Gas temperature	
ATEX:	-40 °C ... +105 °C at T1, T2, T3; -40 °C ... +91 °C at T4
Other Ex certifications:	-40 °C ... +180 °C
On request:	-194 °C ... +280 °C
Operating pressure	0 bar (g) ... 250 bar (g) On request: Up to 450 bar (g)
Nominal pipe size	
	2 " ... 48 " (DN 50 ... DN 1200)
Ambient temperature	
ATEX, CSA:	–40 °C ... +60 °C
IECEx:	–40 °C ... +70 °C Optional
IECEx:	–50 °C ... +70 °C
Storage temperature	–40 °C ... +70 °C
Ambient humidity	≤ 95 % Relative humidity

Conformities	AGA-Report No. 9 API 21.1 OIML D11 OIML R137-1 ISO 17089-1 BS 7965 Pattern approval: MID, PTB, NMi, Measurement Canada, GOST ...
Ex-approvals	
IECEx	Gb/Ga Ex db eb ib [ia Ga] IIA T4 Gb/Ga Ex db eb ib [ia Ga] IIC T4 Ultrasonic transducers intrinsically safe
ATEX	II 1/2G Ex db eb ib [ia] IIA T4 II 1/2G Ex db eb ib [ia] IIC T4 Ultrasonic transducers intrinsically safe
NEC/CEC (US/CA)	Class I, Division 1, Groups B, C, D T4 Class I, Division 2, Groups A, B, C, D T4 Class I, Division 1, Group D T4 Class I, Division 2, Group D T4 Ultrasonic transducers intrinsically safe
Electrical safety	CE
Enclosure rating	IP 65 / IP 66 / IP 67
Analog outputs	1 output: 4 ... 20 mA, 200 Ω Active/passive, electrically isolated
Digital outputs	3 outputs: 30 V, 10 mA Passive, electrically isolated, Open Collector or according to NAMUR (EN 50227), f_{max} = 6 kHz (scalable)
Interfaces	RS-485 (2x, for configuration, output of measured values and diagnosis)
Bus protocol	Modbus ASCII Modbus RTU HART
Operation	Via meter display and software MEPAFLOW600
Dimensions (W x H x D)	See dimensional drawings
Weight	Depending on device version
Material in contact with media	Low temperature carbon steel, stainless steel, duplex steel
Electrical connection	
Voltage	12 ... 28.8 V DC With active current output: 15 ... 28.8 V DC
Power consumption	≤ 1 W

Measuring ranges

Measuring ranges

Nominal size		Flow rate				Max. velocity *	
		m³/h		ft³/h		m/s	ft/s
		Min.	Max.	Min	Max.		
DN 50	2"	4	400	140	14,000	65	213
DN 80	3"	8	1,000	280	35,000	65	213
DN 100	4"	13	1,600	460	56,000	60	197
DN 150	6"	20	3,000	710	106,000	50	164
DN 200	8"	32	4,500	1,130	159,000	45	148
DN 250	10"	50	7,000	1,770	247,000	40	131

Nominal size		Flow rate				Max. velocity *	
		m³/h		ft³/h		m/s	ft/s
		Min.	Max.	Min	Max.		
DN 300	12"	65	8,000	2,300	282,000	33	108
DN 350	14"	80	10,000	2,830	353,000	33	108
DN 400	16"	120	14,000	4,240	494,000	33	108
DN 450	18"	130	17,000	4,600	600,000	33	108
DN 500	20"	200	20,000	7,070	707,000	33	108
DN 550	22"	260	26,000	9,185	919,000	33	108
DN 600	24"	320	32,000	11,300	1,131,000	33	108
DN 650	26"	360	36,000	12,700	1,272,500	32	103
DN 700	28"	400	40,000	14,100	1,414,000	30	98
DN 750	30"	400	45,000	14,100	1,590,000	30	98
DN 800	32"	400	50,000	14,100	1,767,000	30	98
DN 850	34"	525	58,000	18,550	2,050,000	30	98
DN 900	36"	650	66,000	23,000	2,333,000	30	98
DN 950	38"	650	73,000	23,000	2,580,500	30	98
DN 1000	40"	650	80,000	23,000	2,828,000	30	98
DN 1050	42"	1,300	85,000	46,000	3,004,000	30	98
DN 1100	44"	1,400	90,000	49,500	3,181,000	28	92
DN 1150	46"	1,500	95,000	53,050	3,358,000	28	91
DN 1200	48"	1,600	100,000	56,600	3,535,000	27	89

* When using installation configuration 2 (with flow conditioner) the maximum allowed gas velocity in the pipe is limited to 40 m/s (131 ft/s).

Ordering information

Our regional sales organization will help you to select the optimum device configuration.

Dimensional drawings (Dimensions in mm (inch))

Versions with nominal sizes from 3" up to and including 14" (cast)

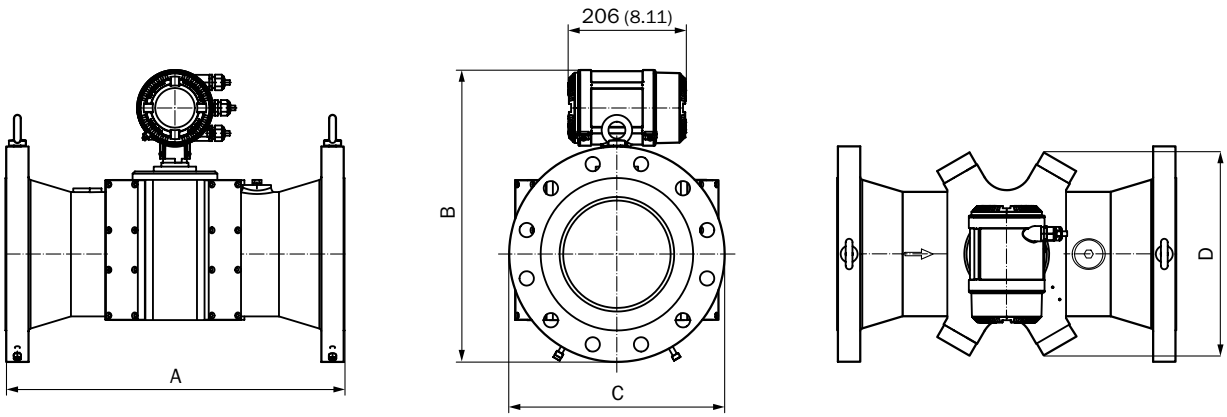

Versions for nominal sizes from 16" (forged)

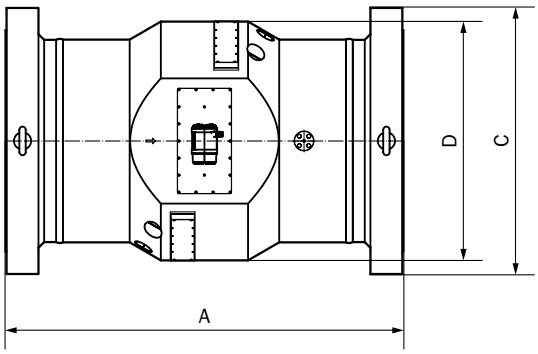

Longitudinal section for nominal widths up to 48"

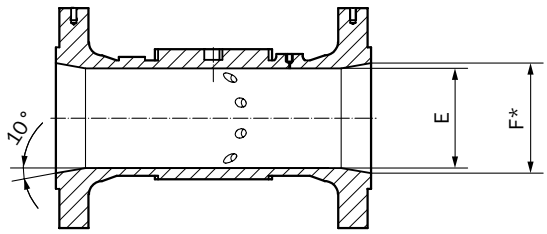

Dimensions

Nominal pipe size	Connection flange	Standard	Weight [kg]	Length (A) [mm]	Height (B) [mm]	Flange diameter (C) [mm]	Width of measuring section (D) [mm]	Internal diameter (E) [mm]
3"	Cl. 150	ANSI B16.5	37	240	344	190	180	73
	Cl. 300		38		354	210		
	Cl. 600		42		354	210		
	Cl. 900		84	400	395	240		
DN 80	PN 16	DIN 2633	37	240	349	200		
	PN 63	DIN 2636	40		356	215		
	PN 100	DIN 2637	43		364	230		
4"	Cl. 150	ANSI B16.5	44	300	375	230	240	95
	Cl. 300		55		388	255		
	Cl. 600		66		398	275		
	Cl. 900		99	500	408	290		
DN 100	PN 16	DIN 2633	40	300	372	220		
	PN 63	DIN 2636	52		405	250		
	PN 100	DIN 2637	61		410	265		
6"	Cl. 150	ANSI B16.5	100	450	445	280	300	142
	Cl. 300		110		465	320		
	Cl. 600		140		483	355		
	Cl. 900		220	750	496	380		
DN 150	PN 16	DIN 2633	90	450	448	285		
	PN 63	DIN 2636	110		478	345		
	PN 100	DIN 2637	130		483	355		

Nominal pipe size	Connection flange	Standard	Weight [kg]	Length (A) [mm]	Height (B) [mm]	Flange diameter (C) [mm]	Width of measuring section (D) [mm]	Internal diameter (E) [mm]
8”	Cl. 150	ANSI B16.5	150	600	498	345	350	190
	Cl. 300		180		516	380		
	Cl. 600		210		536	420		
	Cl. 900		300		562	470		
DN 200	PN 16	DIN 2633	140		498	340		
	PN 63	DIN 2636	190		535	415		
	PN 100	DIN 2637	210		543	430		
10”	Cl. 150	ANSI B16.5	240	750	548	405	410	235
	Cl. 300		250		568	445		
	Cl. 600		330		600	510		
	Cl. 900		470		625	545		
DN 250	PN 16	DIN 2633	220		547	405		
	PN 63	DIN 2636	270		580	470		
	PN 100	DIN 2637	320		597	505		
12”	Cl. 150	ANSI B16.5	350	900	586	485	470	270
	Cl. 300		400		605	520		
	Cl. 600		490		625	560		
	Cl. 900		720		685	610		
DN 300	PN 16	DIN 2633	325		575	460		
	PN 63	DIN 2636	425		610	530		
	PN 100	DIN 2637	525		638	585		
14”	Cl. 150	ANSI B16.5	475	1,050	642	535	540	315
	Cl. 300		600		667	585		
	Cl. 600		675		677	605		
	Cl. 900		850		700	640		
DN 350	PN 16	DIN 2633	475		635	520		
	PN 63	DIN 2636	625		675	600		
	PN 100	DIN 2637	750		705	655		
For all meter ≥ 16" an installation length of 3D is optionally available								
16”	Cl. 150	ANSI B16.5	475	762	700	595	570	360
	Cl. 300		550		728	650		
	Cl. 600		640		745	685		
	Cl. 900		1,025	800	755	705		
DN 400	PN 16	DIN 2633	370	762	693	580		
	PN 63	DIN 2636	600		738	670		
18”	Cl. 150	ANSI B16.5	660	820	754	635	620	405
	Cl. 300		760		792	710		
	Cl. 600		960		820	745		
	Cl. 900		1,300	900	830	785		
DN 450	PN 16	Data on request						

Nominal pipe size	Connection flange	Standard	Weight [kg]	Length (A) [mm]	Height (B) [mm]	Flange diameter (C) [mm]	Width of measuring section (D) [mm]	Internal diameter (E) [mm]
20"	Cl. 150	ANSI B16.5	750	902	815	700	670	450
	Cl. 300		930		853	775		
	Cl. 600		1,080		872	815		
	Cl. 900		1,500	1,000	892	855		
DN 500	PN 16	DIN 2633	700	902	823	715		
22"	Cl. 150	Data on request						
	Cl. 300							
	Cl. 600							
	Cl. 900							
DN 550	PN 16							
24"	Cl. 150	ANSI B16.5	1,090	991	927	815	760	540
	Cl. 300		1,390		978	915		
	Cl. 600		1,615		990	940		
	Cl. 900		2,100	1,200	1,040	1,040		
DN 600	PN 16	DIN 2633	1,015	991	940	840		
26"	Cl. 150	ASME B16.47	1,475	1,050	965	870	828	585
	Cl. 300		1,825		1,016	972		
	Cl. 600		2,100		1,038	1,016		
	Cl. 900		2,500	1,250	1,073	1,086		
DN 650	PN16	Data on request						
28"	Cl. 150	ASME B16.47	1,950	1,100	1,027	927	862	630
	Cl. 300		2,225		1,080	1,035		
	Cl. 600		2,450		1,100	1,073		
	Cl. 900		3,000	1,300	1,150	1,169		
DN 700	PN16	Data on request						
30"	Cl. 150	ASME B16.47	2,195	1,150	1,080	985	902	675
	Cl. 300		2,545		1,135	1,092		
	Cl. 600		2,820		1,154	1,130		
	Cl. 900		3,350	1,350	1,205	1,232		
DN 750	PN16	Data on request						
32"	Cl. 150	ASME B16.47	2,485	1,200	1,145	1,061	979	720
	Cl. 300		2,835		1,190	1,150		
	Cl. 600		3,110		1,212	1,194		
	Cl. 900		3,800	1,400	1,272	1,315		
DN 800	PN 16	Data on request						
34"	Cl. 150	Data on request						
	Cl. 300							
	Cl. 600							
	Cl. 900							
DN 850	PN 16							
36"	Cl. 150	ASME B16.47	3,125	1,250	1,250	1,169	1,082	810
	Cl. 300		3,525		1,300	1,270		
	Cl. 600		3,850		1,323	1,315		
	Cl. 900		5,225	1,450	1,396	1,461		

Nominal pipe size	Connection flange	Standard	Weight [kg]	Length (A) [mm]	Height (B) [mm]	Flange diameter (C) [mm]	Width of measuring section (D) [mm]	Internal diameter (E) [mm]
DN 900	PN 16	Data on request						
38"	Cl. 150	ASME B16.47	3,800	1,300	1,310	1,238	1,160	855
	Cl. 300		3,725		1,275	1,169		
	Cl. 600		4,300		1,325	1,270		
	Cl. 900		Data on request		1,421	1,461		
DN 950	PN 16	Data on request						
40"	Cl. 150	ASME B16.47	3,825	1,350	1,359	1,289	1,213	900
	Cl. 300		4,125		1,334	1,239		
	Cl. 600		4,675		1,375	1,321		
	Cl. 900		Data on request		1,470	1,512		
DN 1000	PN 16	Data on request						
42"	Cl. 150	ASME B16.47	4,675	1,450	1,415	1,346	1,261	945
	Cl. 300		4,650		1,386	1,289		
	Cl. 600		5,450		1,444	1,404		
	Cl. 900		Data on request		1,523	1,562		
DN 1050	PN 16	Data on request						
44"	Cl. 150	Data on request						
	Cl. 300							
	Cl. 600							
	Cl. 900							
DN 1100	PN 16							
46"	Cl. 150	Data on request						
	Cl. 300							
	Cl. 600							
	Cl. 900							
DN 1150	PN 16							
48"	Cl. 150	ASME B16.47	6,400	1,600	1,574	1,511	1,416	1,080
	Cl. 300		6,475		1,552	1,467		
	Cl. 600		7,850		1,615	1,594		
	Cl. 900		12,100	1,900	1,711	1,785		
DN 1200	PN 16	Data on request						

Instruction for installation

FLOWSIC600 integration into the pipeline for unidirectional use in configuration 1 (A) and configuration 2 (B)

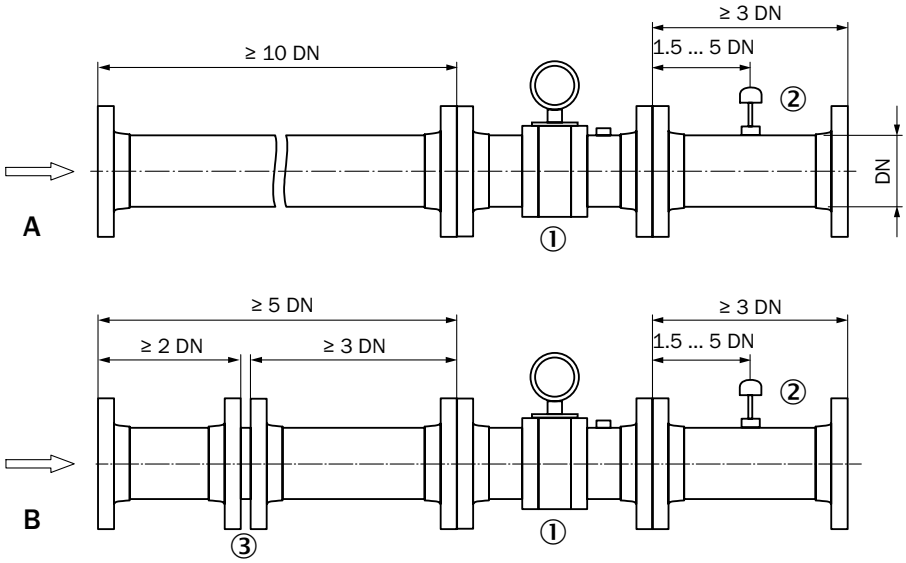

① FLOWSIC600
② Temperature measuring point
③ Flow conditioner

FLOWSIC600 integration into the pipeline for bidirectional use in configuration 1 (A) and configuration 2 (B)

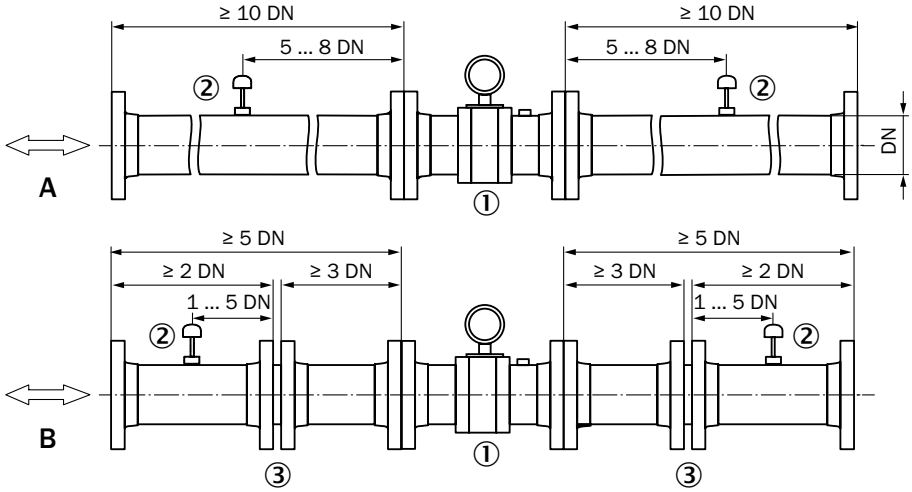

① FLOWSIC600
② Temperature measuring point
③ Flow conditioner

REGISTER AT WWW.SICK.COM TO TAKE ADVANTAGE OF OUR FOLLOWING SERVICES FOR YOU

- ☑ Access information on net prices and individual discounts.
- ☑ Easily order online and track your delivery.
- ☑ Check your history of all your orders and quotes.
- ☑ Create, save, and share as many wish lists as you want.
- ☑ Use the direct order to quickly order a big amount of products.
- ☑ Check the status of your orders and quotes and get information on status changes by e-mail.
- ☑ Save time by using past orders.
- ☑ Easily export orders and quotes, suited to your systems.

SERVICES FOR MACHINES AND PLANTS: SICK LifeTime Services

Our comprehensive and versatile LifeTime Services are the perfect addition to the comprehensive range of products from SICK. The services range from product-independent consulting to traditional product services.

Consulting and design
Safe and professional

Product and system support
Reliable, fast, and on-site

Verification and optimization
Safe and regularly inspected

Upgrade and retrofits
Easy, safe, and economical

Training and education
Practical, focused, and professional

8009840/2022-11 · AA · Pre USmod en49

SICK AT A GLANCE

SICK is a leading manufacturer of intelligent sensors and sensor solutions for industrial applications. With more than 9,700 employees and over 50 subsidiaries and equity investments as well as numerous agencies worldwide, SICK is always close to its customers. A unique range of products and services creates the perfect basis for controlling processes securely and efficiently, protecting individuals from accidents, and preventing damage to the environment.

SICK has extensive experience in various industries and understands their processes and requirements. With intelligent sensors, SICK delivers exactly what the customers need. In application centers in Europe, Asia, and North America, system solutions are tested and optimized in accordance with customer specifications. All this makes SICK a reliable supplier and development partner.

Comprehensive services round out the offering: SICK LifeTime Services provide support throughout the machine life cycle and ensure safety and productivity.

That is "Sensor Intelligence."

Worldwide presence:

Australia, Austria, Belgium, Brazil, Canada, Chile, China, Czech Republic, Denmark, Finland, France, Germany, Great Britain, Hungary, Hong Kong, India, Israel, Italy, Japan, Malaysia, Mexico, Netherlands, New Zealand, Norway, Poland, Romania, Russia, Singapore, Slovakia, Slovenia, South Africa, South Korea, Spain, Sweden, Switzerland, Taiwan, Thailand, Turkey, United Arab Emirates, USA, Vietnam.

Detailed addresses and further locations → www.sick.com

SICK
Sensor Intelligence.