User's Manual

96030 and 96031 Clamp-on Probe

Thank you for purchasing our Clamp-on Probe.
This manual describes the specifications and handling precautions for a Clamp-on Probe.
The following manuals, including this one, are provided as manuals for the 96030 and 96031. Read them along with this manual.

IM 96030-E: User's Manual (this manual)
IM WEEE001E: Waste Electrical and Electronic Equipment
IM CROHS-96030: Document for China

Contact information of Yokogawa offices worldwide is provided on the following sheet.
PIM 113-01Z2: Inquiries List of worldwide contacts

Store this manual in an easily accessible place for quick reference.

All Rights Reserved, Copyright ©
2015, Yokogawa Meters & Instruments Corporation
2017, Yokogawa Test & Measurement Corporation
Printed in Japan

YOKOGAWA ◆
Yokogawa Test & Measurement Corporation
IM 96030-E
10th Edition: Oct. 2017 (YMI)

Sales in Each Country or Region

Authorized Representative in the EEA

Yokogawa Europe B.V. is the authorized representative of Yokogawa Test & Measurement Corporation for this product in the EEA. (EEA: European Economic Area)
To contact Yokogawa Europe B.V., see the separate list of worldwide contacts, PIM 113-01Z2.

Regarding Safe Use of This Product

This product is designed to be used by a person with specialized knowledge. When operating the instrument, be sure to observe the cautionary notes given below to ensure correct and safe use of the instrument. If you use the instrument in any way other than as instructed in this manual, the instrument's protective measures may be impaired. This manual is an essential part of the product; keep it a safe place for future reference.
YOKOGAWA is by no means liable for any damage resulting from use of the instrument in contradiction to these cautionary notes.

The following safety symbols are used on the instrument and in this manual.

⚠ WARNING

Indicates a hazard that may result in the loss of life or serious injury of the user unless the described instruction is abided by.

⚠ CAUTION

Indicates a hazard that may result in an injury to the user and/or physical damage to the product or other equipment unless the described instruction is abided by.

⚠ Danger! Handle with Care.
This mark indicates that operator must refer to an explanation in the instruction manual in order to avoid risk of injury or death of personnel or damage to the instrument.

This symbol indicates that this instrument designed to be applied around or removed from HAZARDOUS LIVE conductors provided if the RATED circuit-to-earth voltage dose not exceed the value indicated in the measurement category.

This symbol indicates AC voltage/current.

This symbol indicates double insulation.

Strictly observe the following cautionary notes in order to avoid the risk of injury or death of personnel or damage to the instrument due to hazards such as electrical shock.

⚠ WARNING

- This instrument is for measuring AC current (clamping sensor). Do not use this instrument for other purpose.
- Do not use the instrument if there is a problem with its physical appearance.
- To avoid a short-circuit or an accident to personnel, use this product within the RATED circuit-to-earth voltage of measurement category.
- Do not use the product when there are raindrops or droplets of condensed water on its surface, or if your hands are wet.
- Barrier is for to avoid touching the HAZARDOUS LIVE conductor.
  Be careful not to across the Barrier when using the instrument.
- Safety protectors such as rubber-insulated gloves should be worn to prevent electrical shock when using the instrument.
- Do not use this product in a place where an explosive gas or vapor is present.
- Do not use the instrument if there is any damage to the casing or when the casing is removed. Do not attempt to repair/modify the product yourself, as doing so is extremely dangerous. Should an abnormality or failure in the product be found, contact the vendor from which you purchased the product.

⚠ CAUTION

- The clamping JAWS are precision assembled to ensure high performance. When using the clamp, do not apply intense mechanical shock, vibration, or force to the clamping JAWS.
- If dust or any other foreign matter gets in the clamping JAWS, do not close the clamping cores tight. First remove the dust and then make sure the clamping cores on both sides close smoothly.

⚠ CAUTION

This product is a Class A (for industrial environments) product. Operation of this product in a residential area may cause radio interference in which case the user will be required to correct the interference.

Cleaning

To remove dirt, disconnect the connector and gently wipe the outer surface with a clean and soft cloth.
Do not use a chemical agent such as benzene or paint thinner.

Measurement Category

⚠ WARNING

The probes are designed for measurement category II.
(The RATED circuit-to-earth voltage: 600 Vrms)
Do not use the probes for measurements in locations falling under Measurement Categories III, IV.
The probes are designed for measurement category III.
(The RATED circuit-to-earth voltage: 300 Vrms)
Do not use the probes for measurements in location falling under Measurement Category IV.

Measurement category	Description	Remarks
O (None, Other)	Other circuits that are not directly connected to MEAINS.	Circuits not connected to a mains power source.
CAT II	For measurement preformed on circuits directly connected to a low-voltage installation.	Appliances, portable equipment, etc.
CAT III	For measurement preformed in a building installation.	Distribution board, circuit breaker, etc.
CAT IV	For measurement preformed at the source of a low-voltage installation.	Overhead wire, cable systems, etc.

Clamp On Power Meter CW140 Specifications (for Model 96031)

When you are using the CW140 connecting with the 96031 probe, the specifications for the CW140 (power factor effects) is as follows:
Power factor effects (For 45Hz ≤ f ≤ 66Hz)

Active power:	±2.0%rng	cos ϕ = ±0.5 (relative to power factor 1)
Reactive power:	±2.0%rng	sin ϕ =±0.5 (relative to reactive power 1)

Specifications

Item		Model 96030 (200 A)	Model 96031 (500 A)
Measurement range		0 to 200 Arms AC (300 Apk)	0 to 500 Arms AC (750 Apk)
Output voltage		0 to 0.5 Vrms AC (2.5 mV/A)	0 to 0.5 Vrms AC (1 mV/A)
Accuracy	Amplitude	±1.5% rdg ± 0.4 mV (20 Hz to 45 Hz) ±0.5% rdg ± 0.1 mV (45 Hz to 66 Hz) ±0.8% rdg ± 0.2 mV (66 Hz to 1 kHz) ±2.0% rdg ± 0.4 mV (1 kHz to 20 kHz)	±1.5% rdg ± 0.4 mV (20 Hz to 45 Hz) ±0.5% rdg ± 0.1 mV (45 Hz to 66 Hz) ±0.8% rdg ± 0.2 mV (66 Hz to 1 kHz) ±2.0% rdg ± 0.4 mV (1 kHz to 5 kHz)
	Phase	±0.5° (45 Hz to 5 kHz)	±1° (45 Hz to 5 kHz, 50 A or more)
		(for temperature of 23°C±5°C, relative humidity of 35 to 75%, and sinewave input)	
Temperature coefficient		±0.05%/°C in ranges of 5 to 18°C and 28 to 40°C	
Maximum allowed current		250 Arms AC (45 Hz to 1 kHz)	625 Arms AC (45 Hz to 400 Hz)
Output impedance		Approximately 6 Ω	Approximately 2.4 Ω
External magnetic field effects		0.1 A equivalent or less (at 400 A/mA, 50/60 Hz)	0.2 A equivalent or less (at 400 A/mA, 50/60 Hz)
Connector position effects		±0.5% (at 20 to 200 A, 45 Hz to 1 kHz)	±0.5% (at 50 to 500 A, 45 Hz to 1 kHz)
The RATED circuit-to-earth voltage		600 Vrms AC maximum	
Withstand voltage		3.7 kVrms AC for one minute, (across core and casing, and across core and output)	
Measurable conductor diameter		ϕ 30 mm maximum	
Operating temperature and humidity		5 to 40°C, 35 to 80% RH (no condensation)	
Storage temperature and humidity		-20 to 60°C, 90% RH or less (no condensation)	
External dimensions		Approx. 73 (W) × 130 (H) × 30 (D) mm (excluding protrusions)	
Weight		Approx. 300 g	
Output cable length		Approx. 3 m (Output terminal: Safety banana plug)	
Accessory		User's manual (1 copy), Ring markers (4 colors × 2): L4007MG	

Safety standards
EN 61010-1, EN 61010-2-032
Measurement category II (The RATED circuit-to-earth voltage: 600 Vrms)
Measurement category III (The RATED circuit-to-earth voltage: 300 Vrms)
Indoor use, altitude 2000 m or less, pollution degree 2

EMC standards
EN 61326-1 Class A,
EN 61326-2-1, EN 61000-6-2
EN 55011 Class A Group 1
EMC Regulatory Arrangement in Australia and New Zealand
EN 55011 Class A Group 1

Effectiveness of radiation immunity:
Measuring accuracy of within ±20% of each range

Environmental standard:
EN 50581
Monitoring and control instruments including industrial monitoring and control instruments

96030/D and 96031/D Obsolete the products

When the Current Clamp is 96030/D or 96031D
Safety standards:
UL3111-1, First Edition,
UL3111-2-032, First Edition,
CAN C22.2 No. 1010.1-92
Installation category III (the RATED circuit-to-earth voltage: 600 Vrms)
Pollution degree 2
(The above standards can be applied when the clamps are used with CW140-D.)

For Precise Measurements

Use this product under the following ambient conditions.
Temperature: 23 ±5°C
Relative humidity: 35 to 75% (no condensation)

- When performing a measurement, hold the probe so that the measured conductor cable runs at the center of the clamp.
- Ensure that the orientation of the clamp to the direction of the conductor cable (power source ⟶ load) is correct as shown right.
- Ensure that the clamping JAWS are properly closed.

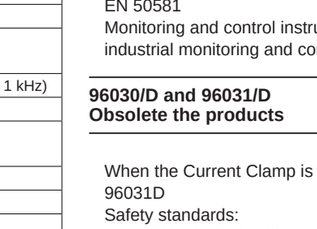

External Dimensions
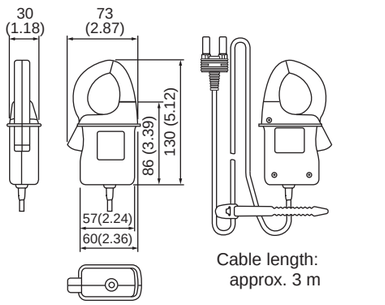
Current Clamp-on Probe Unit = mm (inch)