PRODUCT INFORMATION

LBV301
Vibrating level switch

Rugged, flexible and cleanable

SICK
Sensor Intelligence.

Rugged, flexible and cleanable

Product description

The LBV family of level sensors features a vibrating fork sensor that provides overfill or dry-run signals for containers with bulk or powdered materials. The reliable and accurate LBV301 level sensors signal full, empty, or demand states. The rugged, stainless steel sensor design prevents bulk materials from jamming. When the probe is covered with bulk material, the changing vibration amplitude is reliably detected and converted into a switching signal. In addition, the LBV301 features an easy-to-clean monoprobe that is immune to contamination, making it suitable for use in the food industry. While the LBV311 base version is mainly mounted horizontally, the LBV321 with a suspension cable and the LBV331 with a tube extension are mounted vertically to bridge switching distances of up to 80 m or 6 m respectively. With a variety of process connections for hygienic applications, and several output options, the LBV301 can be used for nearly all applications, even in explosive atmospheres.

At a glance

- Compact sensor from 1 in threaded
- Monoprobe design prevents bulk materials from sticking and jamming
- Polished monoprobe for food applications
- Commissioning without filling
- Process temperature up to 250 °C
- ATEX versions (1D/2D/1G/2G) available
- Tube-extended version (LBV331) up to 6 m and rope-extended version (LBV321) up to 80 m available for vertical mounting

Your benefits

- Easy commissioning and no calibration reduce setup time
- Maintenance-free sensor, reduces downtime
- On-site testing – no mounting required, which reduces setup time
- Flexible and rugged system suitable for many types of applications
- Vertical mounting in difficult installation conditions

Additional information

8014462/2011-09-05
Subject to change without notice

Detailed technical data

Features

	LBV311	LBV321	LBV331
Medium	Bulk solids		
Measurement	Switch		
Probe length	160 mm	480 mm ... 80000 mm	180 mm ... 6000 mm
Process pressure	–1 bar ... 16 bar	–1 bar ... 6 bar	–1 bar ... 16 bar
Process temperature	–50 °C ... +150 °C –50 °C ... +250 °C	–20 °C ... +80 °C –20 °C ... +150 °C	–50 °C ... +150 °C –50 °C ... +250 °C
Fill material density	≥ 0.02 g/cm³		
Tensile strength		≤ 3,000 N	

Performance

Accuracy of sensor element	± 10 mm
Repeatability	≤ 5 mm

Mechanics

	LBV311	LBV321	LBV331
Process connection	G 1 A 1” NPT Flanges Tri-clamp		
Housing material	Plastic Aluminium Stainless steel		
Sensor material	Stainless steel 316L, 318S	Stainless steel 316L, 318S, PUR, FEB	Stainless steel 316L, 318S

Electronics

	Transistor PNP/NPN	Contactless switch	Double relay	Namur
Signal voltage HIGH	U_V – 3 V			
Signal voltage LOW	< 1 V			
Output current	< 300 mA	< 400 mA	> 10 µA; < 3 A AC, 1 A DC	1 mA / 2.5 mA
Capacitive load	100 nF	100 nF	750 VA 54 W	
Inductive load	1 H	1 H	750 VA 54 W	
Contact load			Min 50 mW/ Max. 750 VA, 54 W	
Signal output	Transistor output PNP/NPN: 10 V DC ... 55 V DC	Contactless switch: 20 V AC/DC ... 253 V AC/DC	Double relay (DPDT): 20 V DC ... 72 V DC / 20 V AC ... 253 V AC	Namur: 4.5 V DC ... 12 V DC
Ripple	≤ 5 V_{SS}			
Power consumption	< 10 mA	< 4.2 mA	5 mA ... 30 mA	1 mA / 2.5 mA
Initialization time	< 2 s	< 3 s	< 2 s	< 2 s
Protection class	⧈	⏚	⏚	⧈
Hysteresis	2 mm			
Response time	500 ms when covered / 1000 ms when uncovered			
Enclosure rating	IP 66/IP 67 or IP 66/IP 68 (0.2 bar)			

Ambient data

Ambient temperature, operation	–40 °C ... +70 °C
Ambient temperature, storage	–40 °C ... +80 °C

Type codes

LBV311

Approval

XX	Without approval
CX	ATEX II 1G, 1/2G, 2G Ex ia IIC T6
CK	ATEX II 1,1/2,2G Ex ia IIC T6+1,1/2,2D Ex tD IP66 T*
LX	ATEX II 1/2G, 2G EEx d IIC T6
GX	ATEX II 1,1/2,2D Ex tD IP66 T*
EZ	ATEX II 3G Ex nA II T5...T1 X

Version / Process temperature

A	Standard / –50 °C ... +150 °C
B	With adapter / –50 °C ... +250 °C
C	Detection of solids in water / –50 °C ... +150 °C

Process fitting / Material

GC	Thread G 1 (DIN 3852-A) PN 16 / 316 L
GR	Thread G 1 (DIN 3852-A) PN 16 / 316 L, Ra<0,8µm
NC	Thread 1” NPT (ASME B1.20.1) PN16 /316L
NR	Thread 1” NPT (ASME B1.20.1) PN16 /316L, Ra<0,8µm
CV	Tri-clamp 2'' / 316L, Ra<0,8µm
EF	Flange DN 50 PN 40 Form C, DIN2501 / 316L
KF	Flange DN 80 PN 40 Form C, DIN2501 / 316L
ZF	Flange DN 100 PN 6 Form C, DIN2501 / 316L
HA	Flange 2“ 150lb RF, ANSI B16.5 / 316L
OA	Flange 3“ 150lb RF, ANSI B16.5 / 316L
SA	Flange 4“ 150lb RF, ANSI B16.5 / 316L
AU	Flange DN 50 10K RF JIS / 316L
BU	Flange DN 80 10K RF JIS / 316L
CU	Flange DN 100 10K RF JIS / 316L

Electronics

C	Contactless electronic switch 20...253 V AC/DC
R	Relay (DPDT) 20...72 V DC/20...253 V AC (3A)
T	Transistor (NPN/PNP) 10...55 V DC
N	NAMUR signal

Housing / Enclosure rate

K	Plastic / IP66/ IP67
A	Aluminium / IP66/ IP68 (0.2 bar)
V	Stainless steel (precision casting) 316L / IP66, IP67 (IP68, 0.2 bar)
8	Stainless steel (electro buffed) 316L / IP66, IP67 (IP68, 0.2 bar)

Cable entry / Cable gland

M	M20x1,5 / with
N	½“ NPT / without

LBV311-							X

LBV321

Approval

XX	Without approval
CX	ATEX II 1G, 1/2G, 2G Ex ia IIC T6
CK	ATEX II 1,1/2,2G Ex ia IIC T6+1,1/2,2D Ex tD IP66 T*
GX	ATEX II 1,1/2,2D Ex tD IP66 T*
EZ	ATEX II 3G Ex nA II T5...T1 X

Version / Process temperature

T	Cable PUR / –20 °C ... +80 °C
H	Cable FEP / –40 °C ... +150 °C
C	Detection of solids in water / –20 °C ... +80 °C

Process fitting / Material

XP	without / mono probe 316L, Ra<0,8µm
GC	Thread G 1 (DIN 3852-A) PN 6 / 316L
GR	Thread G 1 (DIN 3852-A) PN 6 / 316L, tuning stick Ra<0,8µm
NC	Thread 1“ NPT (ASME B1.20.1) PN 6 / 316L
NR	Thread 1“ NPT (ASME B1.20.1) PN 6 / 316L, tuning stick Ra<0,8µm
EF	Flange DN 50 PN 40 Form C, DIN2501 / 316L
KF	Flange DN 80 PN 40 Form C, DIN2501 / 316L
ZF	Flange DN 100 PN 6 Form C, DIN2501 / 316L
HA	Flange 2" 150lb RF, ANSI B16.5 / 316L
OA	Flange 3" 150lb RF, ANSI B16.5 / 316L
SA	Flange 4“ 150lb RF, ANSI B16.5 / 316L
AU	Flange DN 50 10K RF, JIS / 316L
BU	Flange DN 80 10K RF, JIS / 316L
CU	Flange DN 100 10K RF, JIS / 316L

Electronics

C	Contactless electronic switch 20...253 V AC/DC
R	Relay (DPDT) 20...72 V DC/20...253 V AC (3A)
T	Transistor (NPN/PNP) 10...55 V DC
N	NAMUR signal

Housing / Enclosure rate

K	Plastic / IP66/ IP67
A	Aluminium / IP66/ IP67 (IP68, 0.2 bar)
V	Stainless steel (precision casting) 316L / IP66, IP67 (IP68, 0.2 bar)
8	Stainless steel (electro buffed) 316L / IP66, IP67 (IP68, 0.2 bar)

Cable entry / Cable gland

M	M 20x1,5 / with
N	½“ NPT / without

LBV321-							X

LBV331

Approval

XX	Without approval
CX	ATEX II 1G, 1/2G, 2G Ex ia IIC T6
CK	ATEX II 1,1/2,2G Ex ia IIC T6+1,1/2,2D Ex tD IP66 T*
GX	ATEX II 1,1/2,2D Ex tD IP66 T*
EZ	ATEX II 3G Ex nA II T5...T1 X

Version / Process temperature

T	Kabel PUR / –20 °C ... +80 °C
H	Kabel FEP / –40 °C ... +150 °C
C	Detection of solids in water / –20 °C ... +80 °C

Process fitting / Material

GC	Thread G 1 (DIN 3852-A) PN 16 /316L
GR	Thread G 1 (DIN 3852-A) PN 16 / 316L, Ra<0,8µm
NC	Thread 1“ NPT (ASME B1.20.1) PN 16 / 316L
NR	Thread 1“ NPT (ASME B1.20.1) PN 16 / 316L, Ra<0,8µm
CV	Tri-clamp 2" / 316L, Ra<0,8µm
EF	Flange DN 50 PN 40 Form C, DIN2501 / 316L
KF	Flange DN 80 PN 40 Form C, DIN2501 / 316L
ZF	Flange DN 100 PN 6 Form C, DIN2501 / 316L
HA	Flange 2" 150lb RF, ANSI B16.5 / 316L
OA	Flange 3“ 150lb RF, ANSI B16.5 / 316L
SA	Flange 4“ 150lb RF, ANSI B16.5 / 316L
AU	Flange DN 50 10K RF, JIS / 316L
BU	Flange DN 80 10K RF, JIS / 316L
CU	Flange DN 100 10K RF, JIS / 316L

Electronics

C	Contactless electronic swi 20...253 V AC/DC
R	Relay (DPDT) 20...72 V DC/20...253 V AC (3A)
T	Transistor (NPN/PNP) 10...55 V DC
N	NAMUR signal

Housing / Enclosure rate

K	Plastic / IP66/ IP67
A	Aluminium / IP66/ IP67
V	Stainless steel (precision casting) 316L / IP66, IP67 (IP68, 0.2 bar)
8	Stainless steel (electro buffed) 316L / IP66, IP67 (IP68, 0.2 bar)

Cable entry / Cable gland

M	M 20x1,5 / with
N	½“ NPT / without

LBV331-							X

Ordering information

The part numbers below show a selection of our common configurations and represent only an extract of the product portfolio.

LBV311

- **Process connection:** G 1 A
- **Process temperature:** –50 °C ... +150 °C
- **Process pressure:** –1 bar ... +16 bar
- **Housing material:** Plastic
- **Electrical connection:** M20 x 1,5
- **Probe length:** 160 mm

Output signal	Model name	Part no.
1x PNP/ NPN	LBV311-XXAGCTKMX	6044865
Contactless electronic switch	LBV311-XXAGCCKMX	6044863
Double relay (DPDT)	LBV311-XXAGCRKMX	6044864
NAMUR signal	LBV311-XXAGCNKMX	6044866

LBV321

- **Process connection:** G 1 A
- **Process temperature:** –20 °C ... +80 °C
- **Process pressure:** –1 bar ... 6 bar
- **Housing material:** Plastic
- **Electrical connection:** M20 x 1,5
- **Probe length:** 1.000 mm

Output signal	Model name	Part no.
1x PNP/ NPN	LBV321-XXTGCTKMX01000	6044870
Contactless electronic switch	LBV321-XXTGCCKMX01000	6044868
Double relay (DPDT)	LBV321-XXTGCRKMX01000	6044869
NAMUR signal	LBV321-XXTGCNKMX01000	6044871

LBV331

- **Process connection:** G 1 A
- **Process temperature:** –50 °C ... +150 °C
- **Process pressure:** –1 bar ... 16 bar
- **Housing material:** Plastic
- **Electrical connection:** M20 x 1,5
- **Probe length:** 1.000 mm

Output signal	Model name	Part no.
1x PNP/ NPN	LBV331-XXAGCTKMX01000	6044876
Contactless electronic switch	LBV331-XXAGCCKMX01000	6044874
Double relay (DPDT)	LBV331-XXAGCRKMX01000	6044875
NAMUR signal	LBV331-XXAGCNKMX01000	6044877

Dimensional drawings

Process connections LBV311

G 1 A

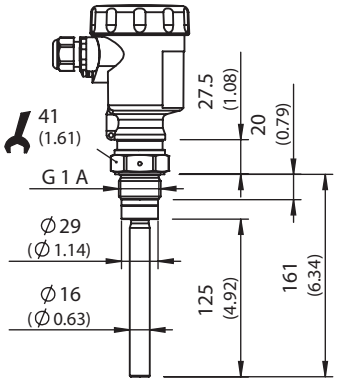

All dimensions in mm (inch)

G 1 ½ A

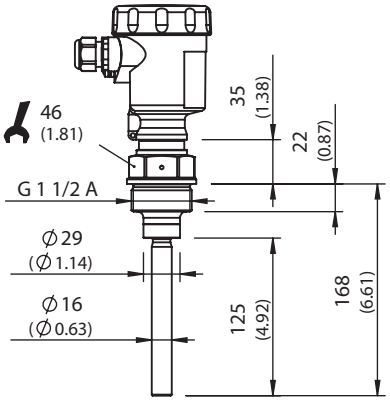

All dimensions in mm (inch)

Tri-clamp

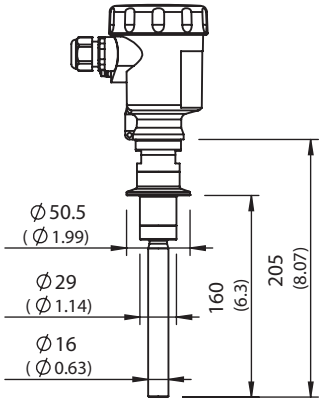

All dimensions in mm (inch)

Temperature adapter –50 °C ... +250 °C

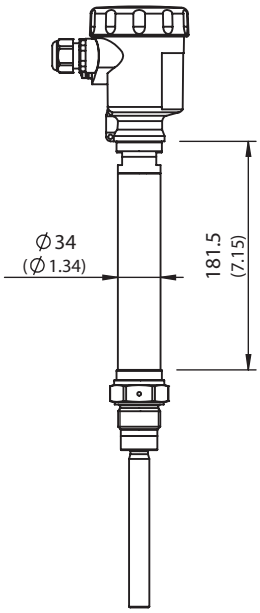

All dimensions in mm (inch)

Process connections LBV321

G 1 A

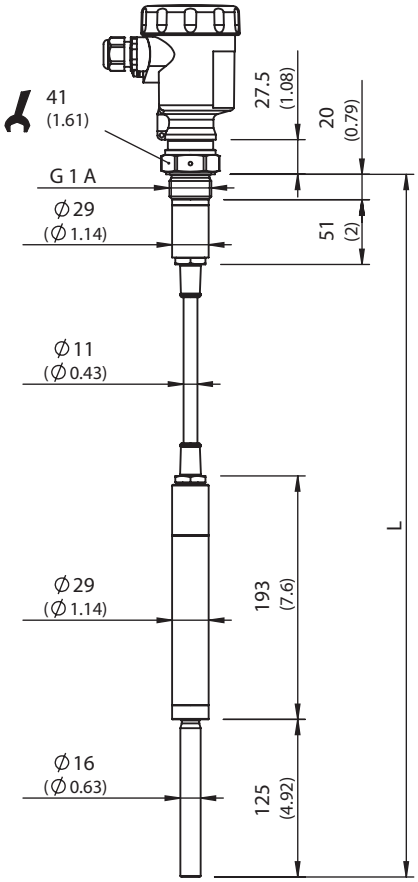

All dimensions in mm (inch)

G 1 ½ A

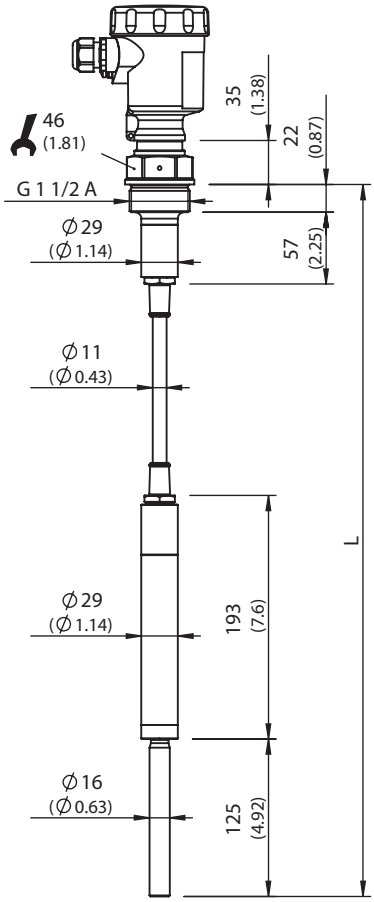

All dimensions in mm (inch)

Process connections LBV331

G 1 A

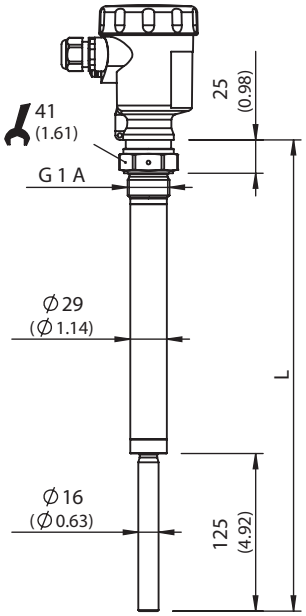

All dimensions in mm (inch)

G 1 ½ A

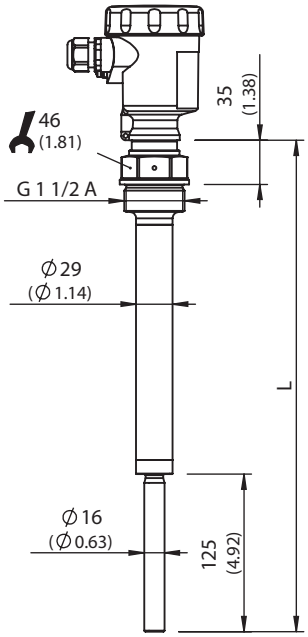

All dimensions in mm (inch)

Flange

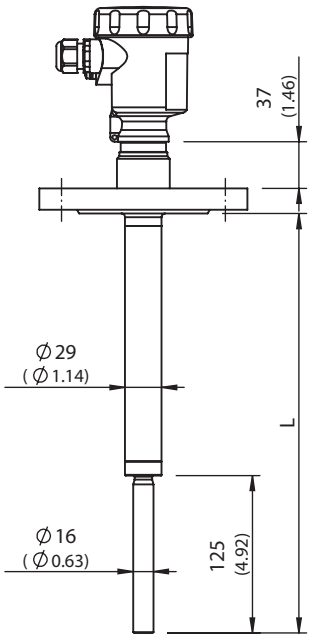

All dimensions in mm (inch)

Wiring plan

Relay output
We recommend connecting LBV301 in such a way that the switching circuit is open when there is a level signal, line break or failure (safe condition).
The relays are always shown in non-operative condition.

LBV301 - Wiring plan, single chamber housing

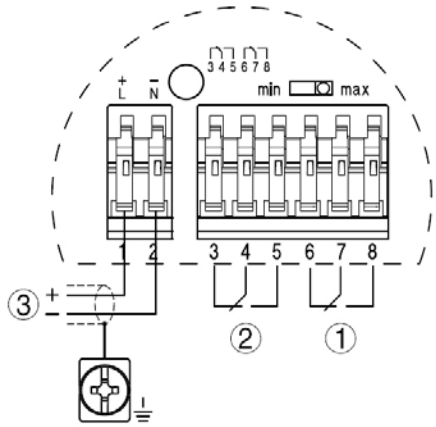

1 Relay output
2 Relay output
3 Voltage supply

Transistor output
We recommend connecting LBV301 in such a way that the switching circuit is open when there is a level signal, line break or failure (safe condition).

The instrument is used to control relays, contactors, magnet valves, warning lights, horns as well as PLC inputs.

LBV301 - Wiring plan, single chamber housing

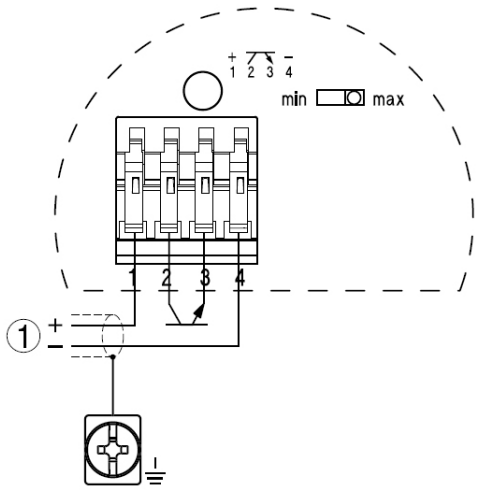

1 Voltage supply

LBV301 Transistor output NPN action

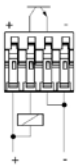

LBV301 Transistor output PNP action

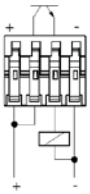

NAMUR output
For connection of the amplifier according to NAMUR (IEC 60947-5-6, EN 50227). You can find further information in the „Technical data“.

LBV301 - Wiring plan, single chamber housing

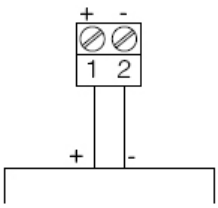

Contactless electronic switch
We recommend connecting LBV301 in such a way that the switching circuit is open when there is a level signal, line break or failure (safe condition).

The contactless electronic switch is always shown in non-operative condition.

The instrument is used for direct control of relays, contactors, magnet valves, warning lights, horns etc. It must not be operated without an intermediately connected load, because the electronics would be destroyed if connected directly to the mains.

It is not suitable for connection to low voltage PLC inputs. Domestic current is temporarily lowered below 1mA after switching off the load so that contactors, whose holding current is lower than the constant domestic current of the electronics, are reliably switched off.

LBV301 - Wiring plan, single chamber housing

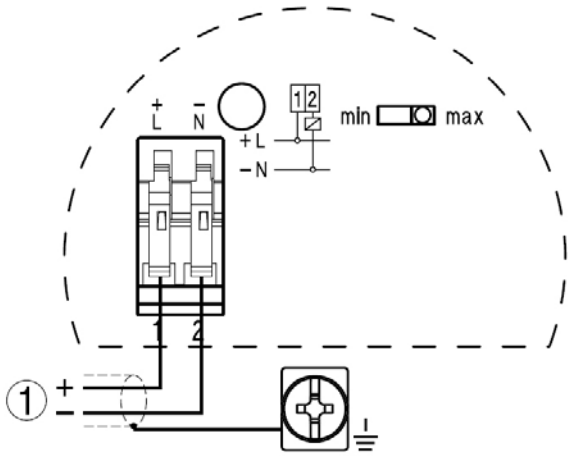

1 Shielding

Recommended accessories

Lock fitting

Material	Type	Part no.
Lock fitting for LBV331, Unpressurised, -50 °C ... 250°C, Certification XX, Process connection G 1 ½ A, 316L	BEF-MU-316G11-DLBV	5326227
Lock fitting for LBV331, -1 bar ... 16 bar,-50 °C ... 150°C/ Certification XX, CX, CK, LX, GX, Process connection G 1 ½ A,316L	BEF-MU-316G11-PLBV	5326228
Lock fitting for LBV331, Unpressurised, -50 °C ... 250°C, Certification XX, Process connection 1 ½" NPT, 316L	BEF-MU-316N11-DLBV	5326229
Lock fitting for LBV331, -1 bar ... 16 bar, -50 °C ... 150°C, Certification XX, CX, CK, LX, GX, Process connection 1 ½" NPT, 316L	BEF-MU-316N11-PLBV	5326230

Mounting instructions

Switching point

In general, LBV301 can be installed in any position. The instrument only has to be mounted in such a way that the vibrating element is at the height of the desired switching point.
The only exception is vertical mounting of the tuning fork from below. In this position there is the danger of solid particles getting stuck between the fork tines.

Socket

The vibrating element should protrude into the vessel to avoid build-up. For that reason, avoid using mounting bosses for flanges and screwed fittings. This applies particularly to horizontal installation and use with adhesive products.

Filling opening

Install the instrument in such a way that the vibrating element does not protrude directly into the filling stream. Should such an installation location be necessary, mount a suitable baffle above or in front of the vibrating element, e.g. L80 x 8 DIN 1028 (see Fig. Part „a.“). In abrasive solids, mounting according to fig. Part „b.“ has proven to be a good solution. The mound that forms in the concave baffle protects it from abrasion.

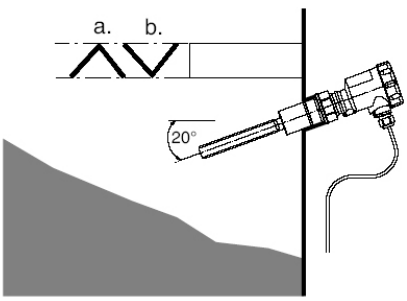

a. Convex mounting
b. Concave mounting

Inflowing medium

If LBV301 is mounted in the filling stream, unwanted false measurement signals can be generated. For this reason, mount LBV301 at a position in the vessel where no disturbances, e.g. from filling openings, agitators, etc., can occur.

Horizontal mounting

To achieve a very precise switching point, you can install LBV301 horizontally. However, if the switching point can have a tolerance of a few centimeters, we recommend mounting LBV301 approx. 20° inclined to the vessel bottom to avoid build-up. Orient the tuning fork of LBV301 so that the product cannot remain lying on the fork surface. There is a mark on the thread hexagon for aligning the fork. Make sure that the mark points upward.

Material cone

To achieve a very precise switching point, you can install LBV301 horizontally. However, if the switching point can have a tolerance of a few centimeters, we recommend mounting LBV301 approx. 20° inclined to the vessel bottom to avoid build-up.

Orient the tuning fork of LBV301 so that the product cannot remain lying on the fork surface. There is a mark on the thread hexagon for aligning the fork. Make sure that the mark points upward.
To compensate measurement errors caused by the material cone in cylindrical vessels, the sensor must be mounted at a distance of d/6 from the vessel wall.

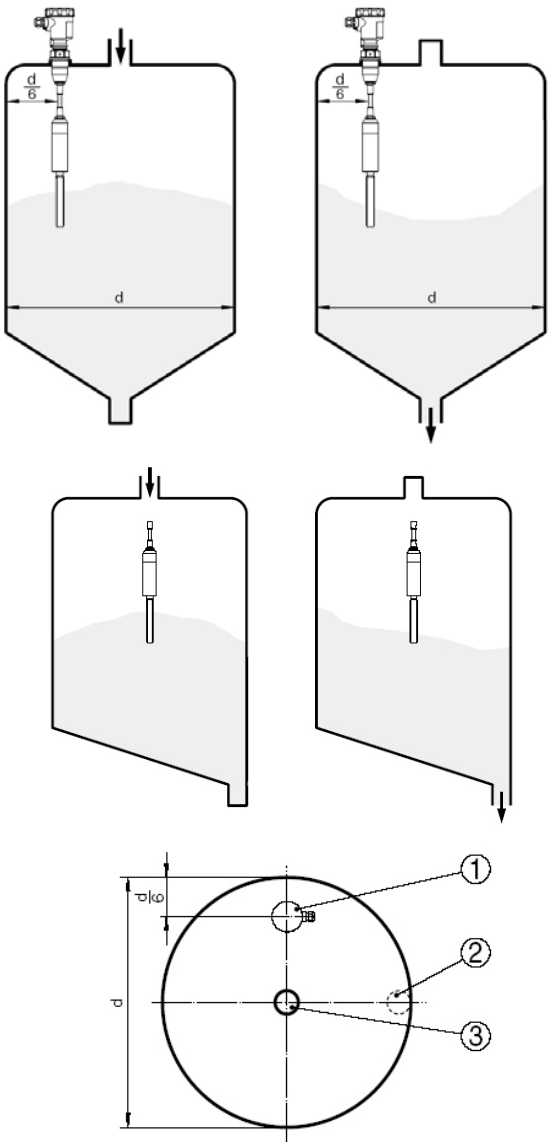

1 LBV321
2 Emptying opening
3 Filling opening

Tensile load

With cable version, make sure that the max. permissible tensile load on the suspension cable is not exceeded. The danger of this happening exists particularly with very heavy solids and large meas. lengths. The max. permissible load is stated in chapter „Technical data“.

Agitators

Due to filling or extraction forces, vibrations or similar, the level switch can be subjected to strong lateral forces. For this reason, do not use an overly long extension tube for LBV331, but check if a LBV311 level switch couldn‘t be used instead, mounted on the side of the vessel in horizontal position. Extreme vibration caused by the process or the equIP ment, e.g. by fluidization or beaters in the vessel, can cause the extension tube of LBV301 to vibrate in resonance. This leads to increased stress on the upper weld joint. Should a longer tube version be necessary, you can provide a suitable support or guy directly above the vibrating element to secure the extension tube.

This measure applies mainly to applications in Ex areas. Make sure that the tube is not subject to bending stress due to this measure.

If an installation from above is necessary, check if you can use a cable version. Over a longer period of time, strong vibration can damage the instrument electronics. You can decouple the electronics from the process by using a remote (displaced) housing.

Baffle protection against falling rocks

In applications such as grit chambers or settling basins for coarse sediments, the vibrating element must be protected against damage with a suitable baffle.

Search online quickly and safely with the SICK “Finders”

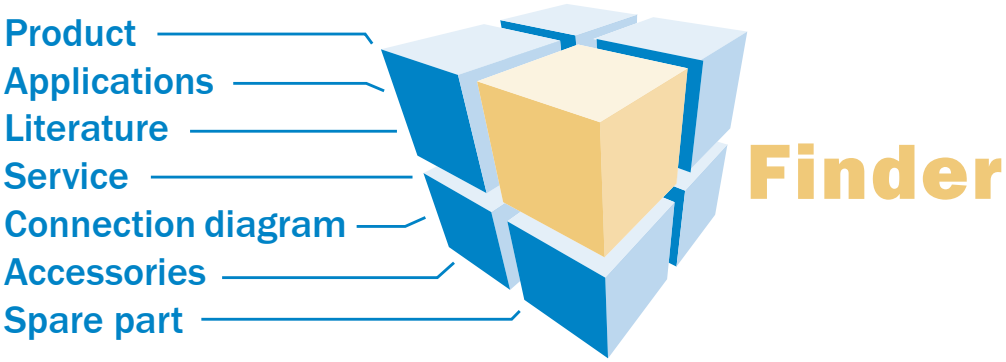

Product Finder: We can help you to quickly target the product that best matches your application.

Applications Finder: Select the application description on the basis of the challenge posed, industrial sector, or product group.

Literature Finder: Go directly to the operating instructions, technical information, and other literature on all aspects of SICK products.

These and other Finders at www.mysick.com

Efficiency – with SICK e-commerce tools

Partner Portal
www.mysick.com

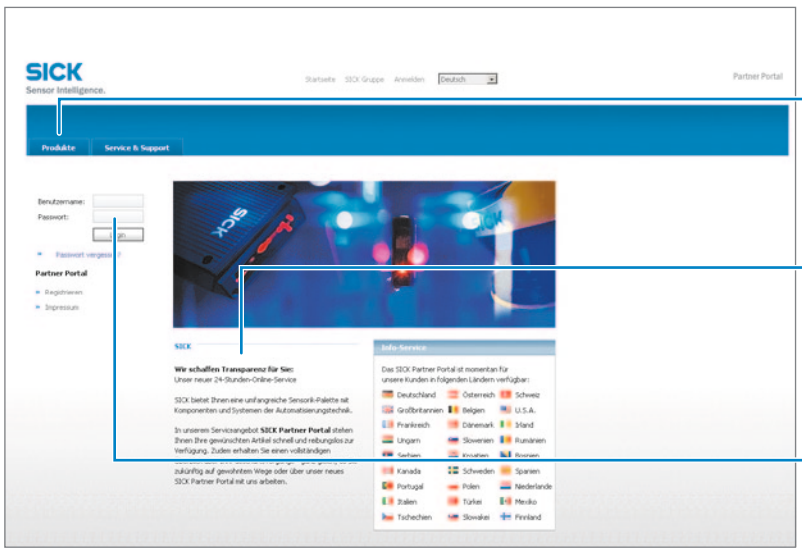

Clearly structured: You can find everything you need for your sensor planning under the menu items Products, Information, and My Account.

Available 24 hours a day: Regardless of where you are in the world or what you’d like to know – everything is just a click away at www.mysick.com.

Safe: Your data is password-protected and only visible to you. With the individual user management, you define who can see what data and who can execute what actions.

Find out prices and availability
Determine the price and possible delivery date of your desired product simply and quickly.

Request or view a quote
You can have a quote generated online here.
Every quote is confirmed to you via e-mail.

Order online
You can go through the ordering process in just a few steps.

8014462/2011-09-05 · GW (2011-09) · WB USmod int37

SICK at a glance

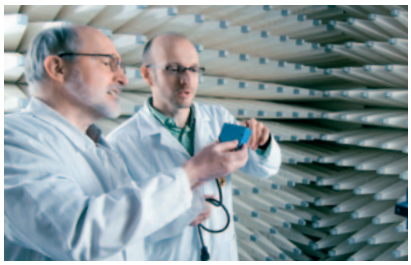

Leading technologies

With a staff of more than 5,000 and over 50 subsidiaries and representations worldwide, SICK is one of the leading and most successful manufacturers of sensor technology. The power of innovation and solution competency have made SICK the global market leader. No matter what the project and industry may be, talking with an expert from SICK will provide you with an ideal basis for your plans – there is no need to settle for anything less than the best.

Unique product range

- Non-contact detecting, counting, classifying, positioning and measuring of any type of object or media
- Accident and operator protection with sensors, safety software and services
- Automatic identification with bar code and RFID readers
- Laser measurement technology for detecting the volume, position and contour of people and objects
- Complete system solutions for analysis and flow measurement of gases and liquids

Comprehensive services

- SICK LifeTime Services – for safety and productivity
- Application centers in Europe, Asia and North America for the development of system solutions under real-world conditions
- E-Business Partner Portal www.mysick.com – price and availability of products, requests for quotation and online orders

Worldwide presence with subsidiaries in the following countries:

Australia
Belgium/Luxembourg
Brasil
Ceská Republika
Canada
China
Danmark
Deutschland
España
France
Great Britain
India
Israel
Italia
Japan
México
Nederland
Norge
Österreich
Polska
România
Russia
Schweiz
Singapore
Slovenija
South Africa
South Korea
Suomi
Sverige
Taiwan
Türkiye
United Arab Emirates
USA

Please find detailed addresses and additional representatives and agencies in all major industrial nations at **www.sick.com**

SICK
Sensor Intelligence.