KEPtrol

Installation & Operating Instructions

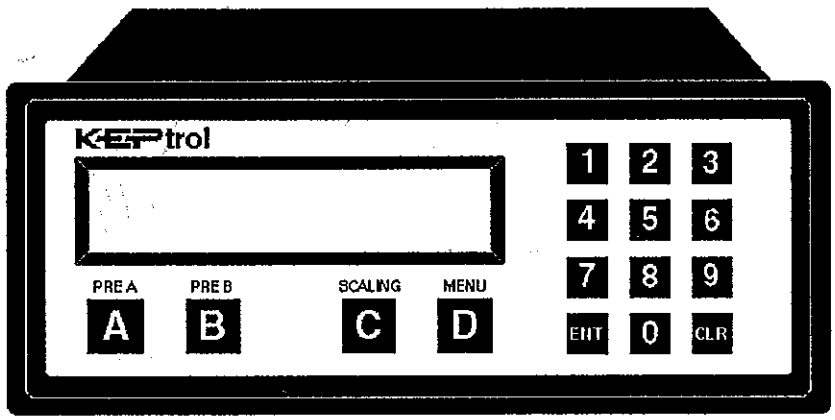

A Programmable Timer, Counter, Ratemeter and Controller

KESSLER-ELLIS PRODUCTS
10 Industrial Way East
Eatontown, NJ 07724
Toll Free: 800-631-2165
Fax: 908-935-9344

99186 02/06/96

KEPtrol
Installations and Operation

Table of Contents

		Page
1.0	Description	3
2.0	KEPtrol Keypad Function Guide	4
2.1	Keypad Setup Flow Chart	Centerfold
3.0	General Specifications	8
3.1	Pulsed Input Specifications	9
3.2	KEPtrol Features	12
4.0	Decoding Part Number	16
5.0	Dimensions/Mounting	17
6.0	Wiring Terminations	17
7.0	Pulse Input Options (Mode/Speed-5,6/8th digit of Part Number)	18
7.1	Simultaneous Input 2A Switchable Options	18
	7.1.1 Input 2A Wiring	
7.2	High Impedance Inputs 3A, 3B, 3C, 3D Switchable Options	19
	7.2.1 Input 3A Wiring	
	7.2.2 Input 3B Wiring	
	7.2.3 Input 3C Wiring	
	7.2.4 Input 3D Wiring	
7.3	Opto-Isolated Inputs 4A, 4B, 4C, 4D Switchable Options	24
	7.3.1 4A, 4B, 4C, 4D Opto-Isolated Features	
	7.3.2 Input 4A, 4B Wiring	
	7.3.3 Input 4C, 4D Wiring	

		Page
7.4	Quadrature Input 9A Switchable Options	26
	7.4.1 Input 9A Wiring	
7.5	Analog Inputs 5A - 5D	27
8.0	I/O Circuit Board Installation/Modification	28
8.1	Control Relay-Driver Card	28
8.2	Removing the Case	29
8.3	Input Card Modification	29
8.4	Data Interface-RS232/422 Installation	30
9.0	Outcard-RS232/RS422 Serial/Strobe Interface	30
9.1	Unit Code	31
9.2	Baud Rate	31
9.3	Parity	31
9.4	RS232 Electrical Requirements	32
9.5	RS422 Electrical Requirements	33
9.6	RS232/RS422 Serial Input Codes	34
9.7	Serial Interface Operation	35
9.8	Strobe Address Operation	38
9.9	Strobe Address Electrical Requirements	39
9.10	RS232/Strobe Input Wiring	41
	9.10.1 RS232 Wiring	
	9.10.2 Strobe Wiring	
9.11	RS422/Strobe Input Wiring	42
	9.11.1 RS422 Wiring	
	9.11.2 Strobe Wiring	
10.0	Schematics	44
10.1	Schematic, Simultaneous Input 2A (#2102)	
10.2	Schematic, High Impedance Input 3A-3D (#2097B)	45
10.3	Schematic, Opto-Isolated Input 4A-4D (#2098)	46
10.4	Schematic, Quadrature Input 9A (#2135)	47
WARRANTY INFORMATION		48

1.0

Description: Counter-Timer-Ratemeter

Featuring 8 digits of bright .55 inch alpha-numeric display, the KEPtrol can accept up to 100,000 pulses per second of digital count or rate data, and time in keyboard selected ranges of 1/10,000 of a second to hours. The unit can multiply the input from 0.0001 to 99.9999 to easily understood units of measurement and give two control outputs at separate set points. Selection of counter, timer or rate meter function as well as input scaling, timer frequency, preset levels, output timing, special security number and external communications are entered on the sealed front keypad by following instructions written on the display.

The unit operates from either 110 VAC / 12 to 27 VDC or optional 220 VAC / 12 to 27 VDC . If AC power is used, two separate regulated 12 VDC @ 100 mA power supplies are offered. They can be connected to provide +12 VDC and -12 VDC or +24 VDC to drive external devices. CMOS logic is used to provide high noise immunity and low power consumption with EEPROM to hold data a minimum of 10 years if power is interrupted.

Integrating the KEPtrol into computers or programmable controllers is made easy by RS232 or RS422 interface. Up to 15 units can be addressed separately to input control points or access data through the optional I/O ports.

KEP trol keypad functions

READ BEFORE SET-UP

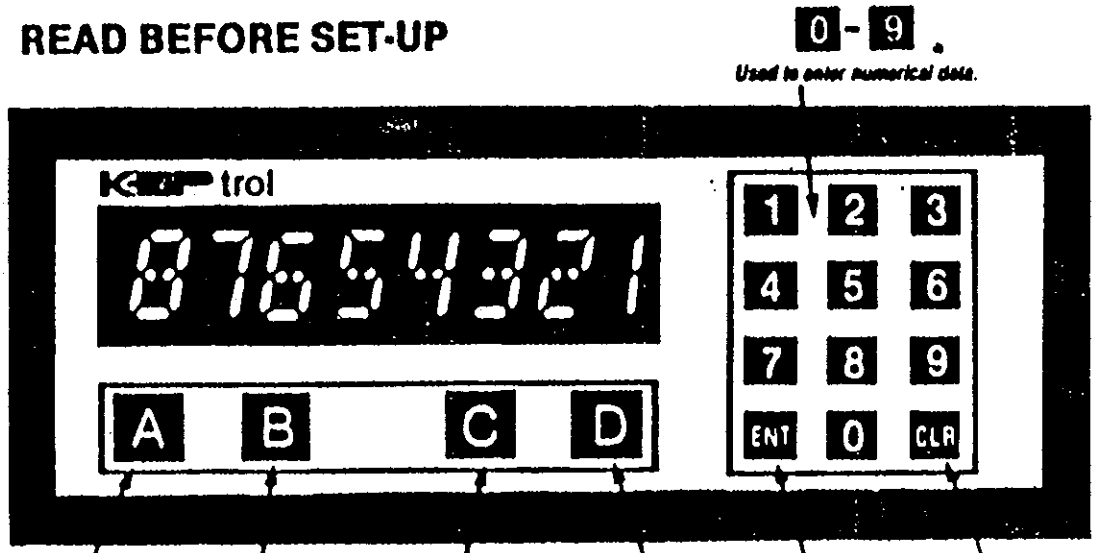

A

PRESET A *Flashes preset number or press A and key in new preset A. Press ENT to go to run mode.*

B

PRESET B *Flashes preset number. ENT or press B and key in new preset B. Press ENT to go to run mode. (Used to select functions in set up mode.)*

C

SCALING *Flashes scale factor. ENT or press C and key in new multiplier from 0.0001 to 99.9999. Press ENT to go to run mode.*

D

Used to select mode. (Also used to key in decimal point when selecting rate meter presets.)

ENT

Used to enter selected data (If BATCHER mode is selected, pressing ENT during run mode will display batch total flashing). Press ENT to return to run mode.

CLR

Used to reset displayed number to zero. (Sets unit to preset A starting number in subtracting "set to preset" mode) Also resets control output.

1. MODE SELECTION

(Check or change device type or operating modes)

1.1 PRELIMINARY Press D to step through the menu options. If there are only two options both will be displayed. Select between the two by pressing B or D under the displayed arrow ↑ to light the line under the arrow ⊥. Only after the desired selection is displayed with a line under the arrow ⊥ do you press ENT to load data and go to next step.

IF THE SETUP SEQUENCE IS INTERRUPTED OR YOU NEED HELP, PRESSING ENT IN THE SET UP MODE STEPS THROUGH THE PREVIOUSLY SELECTED FUNCTIONS TO THE RUN MODE WITHOUT CHANGING DATA.

1.2 SET UP PROCEDURE

Go to the section under the basic heading and follow the steps to set up the device type: **RATE** (Sec. 4), or **COUNTER** (Sec. 5), or **TIMER** (Sec. 6). Next go in turn to each section heading that is relevant to this application and check or change the settings by following the steps given: **RELAY-CONTROL TIMING** (Sec. 7), **LOCKOUT-SECURITY CODE** (Sec. 8), **OUTCARD-COMMUNICATIONS INTERFACE** (Sec. 9). **PRESETS** and **SCALING** (Sec. 2) can be checked or changed at any time while running. Once entered data remains even if power is lost.

2. PRESET SELECTION

(Check or change presets or scaling factor)

Press [A] (Preset A), [B] (Preset B), or [C] (Scaling) to review values. Press [ENT] to go back to run mode or, if settings are not correct, press [CLR] while the data is flashing and key in the correct value. When flashing values are correct press [ENT] to load selection and go back to run mode.

3. FIRST LEVEL MODE SELECTION

(Pressing [D] steps through the four basic menus. Stop at desired mode and [ENT]).

Press [D] MENU
- [D] DEV TYP (Device type)
- [D] LOCKOUT (Security code)
- [D] OUTCARD (Communication interface)
- [D] RELAY (Control timing)

4. RATE MODE SET-UP

Press [D] until display shows DEV TYP (Device type), [ENT].
[B] RT (Rate) C/T (Counter/timer), [ENT]. WEIGHT (Weight to be assigned to old reading when averaging. 0.0 setting shows new rate immediately. 9.9 setting prevents erratic change by showing old rate changed by 10% of new rate.) [ENT] displayed weight or [CLR] and key in 0.0 to 9.9 weight, [ENT]. WINDOW (Max sample time in seconds. Normally updates each second. If a cycle is not completed unit automatically extends sample period up to selected time before updating.) [ENT] displayed time or [CLR] and key in 02 to 24, [ENT].

SIG FIG (Significant figures. Unit is auto ranging and always displays all the whole numbers of rate even if 1 is entered. If a larger number is entered unit will add extra decimal numbers in display to the quantity entered. e.g. Rate is 53.72. Enter 1, unit display 53. Enter 3, unit displays 53.7). [ENT] displayed number or [CLR] and key in 1 to 6, [ENT]. [CLR] Unit displays rate in run mode.

NOTE: The rate meter displays frequency (rate per second). If rate per minute is desired press [C] and scale in 60.0000. [ENT]. Decimal numbers displayed will depend on how many significant figures are selected. To enter a preset rate with a decimal, press [A] or [B], [CLR] and key in the desired number using [D] as decimal point entry button. [ENT] flashing preset number.

5. COUNTER MODE SET-UP

Press [D] until display shows DEV TYP (Device type), [ENT].
[D] RT (Rate) C/T (Counter/timer), [ENT].
[B] CO (Counter) TIM (timer), [ENT].
[B] RO (Reset to O) SP (Set to preset), [ENT]. (Press [D] to step through 4 options for cycling counter. Stop at desired mode and [ENT]).
[D] AUTO REC (Auto recycle at preset A)
[D] ALT ACT (Alternate action: Output A activates at preset A, counter resets; Output A drops out at preset B If the selected duration of output A has not timed out, counter resets. Output B latches or times out when preset B is reached.)
[D] MAN RES. (Manual reset)
[D] BATCHER (Counts to preset A, recycles; adds one count to batch total until preset B is reached, manual reset; timing for relays per setting. See section 7.) (Select any one of 4 above, [ENT].)

DEC LOC (Decimal location, fixed position for display only) Key in 0 to 8. [ENT].
[CLR] Unit displays count with selected decimal point in run mode.
NOTE: If Batcher mode is selected, pressing [ENT] changes display between count and batch total (flashing.) Batch total and preset output are resettable while flashing.

6. TIMER MODE SET-UP

Press [D] until display shows DEV TYP! (device type) [ENT].
[D] RT! (Rate) C/T! (Counter/timer), [ENT].
[D] CT! (Counter) TIM! (timer). [ENT].
[B] RO! (Reset to 0) SP! (Set to preset), [ENT].
(Press [D] to step through 4 options for cycling timer. Stop at desired mode and [ENT].)
[D] AUTO REC! (Auto recycle at preset A)
[D] ALT ACT! (Alternate Action: Output A activates at preset A, counter resets; Output A drops out at preset B if the selected duration of Output A has not timed out, counter resets. Output B latches or times out when preset B is reached).
[D] MAN RES! (Manual reset)
[D] BATCHER! (Times to preset A, recycles; adds one count to batch total until preset B is reached, manual reset; timing for relays per setting. See section 7.)
(Select any one of 4 above, [ENT].)
DEC LOC (Decimal location-fixed position for display only).
Key in 0 to 8, [ENT].
[D] MN! (minute timebase) SEC! (second timebase), [ENT].
(Press [D] to step through 5 time base options. Stop at desired timebase and [ENT].)
[D] 1/10000! (.0001 min. or sec. timebase)
[D] 1/1000! (.001 min. or sec. timebase)
[D] 1/100! (.01 min. or sec. timebase)
[D] 1/10! (.1 min. or sec. timebase)
[D] 1/1! (1 min. or sec. timebase)
(Select any one of 5 time bases above, [ENT].)
(Press [D] to step through 3 time start/stop options. Stop at desired option and [ENT].)
[D] LEVEL! (Times during input)
[D] PULSED! (Pulsed to time, pulsed to stop)
[D] STR-STP! (Separate start-stop inputs)
(Select any of 3 controls above, [ENT].)
[CLR] (Unit displays time in the run mode).

NOTE: If Batcher mode is selected, pressing [ENT] changes display between time and batch total (flashing). Batch total and preset output are resettable while flashing.

7. OUTPUT-CONTROL TIMING SET-UP

Press [D] until display shows RELAY!. Press [ENT]. DUR A X.X (Duration of output A-main signal) [ENT] or [CLR] and key in 0.1 to 9.9 seconds or 0.0 (latch), [ENT]. DUR B X.X (Duration of output B-presignal) [ENT] or [CLR] and key in 0.1 to 9.9 seconds or 0.0 (latch), [ENT]. [CLR] Unit goes to run mode.

KEP trol keypad functions

8. LOCKOUT-SECURITY CODE SET-UP

Press [D] until display shows LOCKOUT|. Press [ENT].
CODE (4 digit panel disable code flashes)
[ENT] or [CLR] and key in new 4 digit code, [ENT]. Unit goes to run mode.
Key in selected 4 digit code to activate LOCK ON. If any function or set point change is attempted, unit flashes LOCK ON. To enable keypad, key in selected code. Unit flashes LOCK OFF and panel changes can be made.

9. OUTCARD-OPT. COMMUNICATIONS INTERFACE SET-UP

Press [D] until display shows OUTCARD|, [ENT].
UNIT X X (Unit identification number displayed)
[ENT] or [CLR] and key in new 00 to 15 number, [ENT].
[D] PLI (Parallel) SER| (Serial), [ENT].
BAUDRATE (Press [D] to step through 6 baudrate options.)
[D] 300|
[D] 600|
[D] 1200|
[D] 2400|
[D] 4800|
[D] 9600|
(Select any baudrate above, [ENT].)
PARITY (Press [D] to step through 4 parity options)
[D] SPACE| (Space parity)
[D] EVEN| (Even parity)
[D] ODD| (Odd parity)
[D] MARK| (Mark parity)
(Select any parity above, [ENT].)
[CLR] Unit goes to run mode.

KESSLER-ELLIS PRODUCTS CO.
120 First Avenue
Atlantic Highlands, NJ 07716
(201) 291-0500
Toll Free 800-631-2165
Telex 132496

3.0 General Specifications

DISPLAY: 8 digit .55" high, 15 segment red orange LED.

INPUT POWER: A: 110 VAC + 15% or 12 to 27 VDC. B: 220 VAC + 15% or 12 to 27 VDC. (Specify A or B when ordering.) Same unit operates on either AC or DC voltage. If AC power used, wire AC pins 17 and 18. If DC power used, wire DC into pin 14 (+DC power in) and pin 12 (Ground, -DC)

CURRENT: Max. 280 mA DC or 5.3 VA at rated AC voltage.(RS232/422 options require additional 100 mA.)

OUTPUT POWER [on AC powered units only 100V (200V) minimum]: +12 VDC @ 100 mA on pin 13. This power is referenced to pin 12 (Ground, -DC). Separate isolated 12 VDC @ 100 mA to allow + 12VDC or +24 VDC, ± 4% worst case. The isolated 12VDC can be referenced to other voltages since it is from an isolated tap of the transformer. If a 24VDC supply is needed, connect pin 15 (isolated -12V) to pin 13 (12 Volt out). KEPtrol will supply 100mA of +24VDC from pin 12 (-DC) to pin 16 (new +24VDC). If a plus and minus 12VDC is needed, connect pin 16 (isolated +12) to pin 12 (-DC). Use pin 12 (-DC) as reference. KEPtrol will supply a -12VDC @ 100mA at pin 15 and +12VDC @100mA at pin 13. If pin 15 is connected to pin 12, KEPtrol supplies 2 separate +12VDC @ 100mA each.

MEMORY: EEPROM stores all program and count data for minimum of 10 years if power is lost.

3.1 PULSE INPUT SPECIFICATIONS: Various inputs may be ordered from standard plug-in input cards. Each input card (designated by 5th digit of part number) has switches to change characteristics on that card (designated by 6th digit) or debounce filtering (designated by 8th digit). The unit will be shipped as ordered. If changes are needed refer to sections 7 and 8.

2A: Simultaneous Pulses: Use for count mode only. Separate pulses on input A count up, pulses on input B count down without loss of count even if pulses come at the same time. Open or 0 to 1VDC (low), 3 to 30VDC (high), 10K Ohm impedance. Max speed 7.5KHz (min. on/off .066 msec) (Internal switch to select debounce filtering to max. speed of 40, 400, or 7.5KHz). (Board #2102)

3A: Standard. High Impedence Up/down Control. Use for count, time and rate modes. Input A accepts all pulses for count, rate and time stop. Input B controls direction of count (low: counts down, high: counts up), starts timer. Open or 0 to 1VDC (low), 3 to 30VDC (high), 10K Ohm impedance. 100,000 Hz max. speed (min. on/off 5 usec.). Min. 31 usec delay required after up/down level change before count pulse. May be used with KEP encoder 715-2.

3B: Same as 3A input but has 4.7K Ohm input pull up resistors to +5VDC on inputs A and B for pulsing with contact to ground or NPN open collector transistor.

PULSE INPUT SPECIFICATIONS

3C: High Impedance Separate Up/down:
Use for count or rate modes only. Same specs as input 3A but separate pulses on input A count up, pulses on input B count down. Inputs must be normally low. (If input A is high, input B counts up on positive edge. If input B is high input A counts down on positive edge). May be used with KEP encoder 715-1.

3D: Same as 3C input but has 4.7K Ohm input pull-up resistors to 5VDC on inputs A and B.

NOTE: Inputs 3A, 3B, 3C, 3D as well as debounce filtering to max. speed of 40,400 or 100K Hz are selectable by internal switches on any series 3 input card. (#2097b)

4A: Optically Isolated Up/down Control 5 to 12VDC:
Use for count, time and rate modes. Input A accepts all pulses for count, rate, time stop. Input B controls direction of count. (low: counts down, high: counts up), starts timer. Open or 0 to 1.5VDC (low), 5 to 12VDC (high), 1.1K Ohm impedance. Max speed 1500 Hz (min. on/off .33 msec. Min. count delay after up/down change, .33 msec.

4B: Same as 4A, but input voltage is open or 0 to 2 VDC (low), 12 to 24 VDC (high), impedance 2.2K Ohm.

4C: Optically Isolated Separate Up/down, 5 to 12VDC:
Use for count or rate mode only. Same specs as input 4A, but separate pulses on input A count up, pulses on input B count down.Inputs must be normally low. (If input A is high, input B counts up on negative edge. If input B is high, input A counts down on positive edge).

PULSE INPUT SPECIFICATIONS

4D: Same as input 4C but input voltage is open or 0 to 2 VDC (low) 12 to 24 VDC (high), impedance 2.2K Ohm.

NOTE: Inputs 4A, 4B, 4C, 4D as well as debounce filtering to max. speed of 40 or 1500 Hz are selectable by internal switches on any series 4 input cards. (#2098E)

9A: Quadrature Input: Use for count or rate mode only. Accepts pulses 90° out of phase for up/down counting. Open or 0 to 1VDC (low), 3 to 30 VDC (high), 10K Ohm impedance, 20K Hz max. speed (min on/off .025 msec) (Internal switch to select debounce filtering to max. speed of 40, 400 or 20K Hz) (Board #2135) May be used with KEP 716 encoder.

RESET: Front pushbutton CLR resets display. Remote resets total count only. Remote reset input requirements follow pulse input selected. High level reset overrides other inputs. Min. on time, 5msec.

3.2 KEPTROL FEATURES

SCALING: Any input from an external source or the internal timebase can be multiplied by any number from 0.0001 to 99.9999. If an input needs to be divided, find the multiplier by finding the reciprocal; 1 divided by the number. (eg. An instrument generates 2.54 pulses per inch, and it is desired to display in inches. 1 divided by 2.54 equals 0.3937. Use multiplier 0.3937.) Press "C" to see scale factor. To change scale factor, press CLR and key in new factor. Press ENT to load in the displayed factor and return to run mode.

PRESET: Two levels (8 digits) or one preset (8 digits) and one batch preset (8 digits). Preset A is the main or primary preset for cycling the counter. Preset B is the precontact or batcher preset. The preset numbers can be displayed or updated at any time by pressing A (preset A) or B (preset B). Enter the flashing preset number or press CLR and key in a new number and ENT . Output time from 0.1 sec. to 9.9 sec. or latched till reset (0.0 setting) is selected by RELAY mode set up.
Note: The Rate Meter mode has a floating decimal point. If a preset with a decimal is needed in the RATE METER mode only, use "D" to key in a decimal when setting up preset numbers. Outputs are active at or above preset rate and "off" below preset rate.

KEPTROL FEATURES

CONTROL OUTPUTS: (each of 2 outputs).

1: NPN transistor version: (Standard) Open collector sinks max. 250 mA from max. 30 VDC when active. (When relay is used, 10 VDC is provided at transistor outputs through relay coil. If greater than 2 mA is used, relay will remain energized. Applying greater than 10 VDC may destroy unit. Transistor will sink 100 mA in "on" state.)
2: SPDT Relay version : 10A 120/240 VAC or 28 VDC

TEMPERATURE: Operating: +32°F (0°C) to +130°F (+54°C). Storage: -40°F (-40°C) to +158°F (+70°C)

KEPTROL FEATURES

MODE SELECTION: All following functions are selected by front keypad. Following prompts written on the display, choose the basic device type, relay output operation, outcard data interface and panel lockout security code.

RATE METER: Accurate to 5 1/2 digits ± 1 display digit. The basic unit displays frequency, or rate per second based on one (1) input pulse per unit of measurement. To calibrate for other inputs or time periods adjust "Scaling". e.g. to display RPM with 4 pulses per rev. set "Scaling" at 15.000. [1 4 (pulses) gives multiplier of .25 x 60.000 (multiplier to display rate per minute) = 15.000. ("Scaling" input)]. Unit can also perform weighted averaging from 0.0 to 9.9 [(old data x wt. + new data):(wt. +1)] and autorange up to 6 digits of significant information. See "Keypad Functions Section 4". Two levels of preset are standard. Outputs are active at or above the preset rate and return to the rest state when reading drops below the preset rate.

COUNTER: 8 digits of count with 2 levels of preset or 1 level of count preset and 1 level of batch preset. Counter is designed to advance on negative edge of pulse. Choose between reset to zero or set to preset. Other choices include; manual reset, auto recycle at preset A, alternate action (counts to preset A, activates output A, counts to preset B, drops out output A.) or batcher. In the batch mode, the unit counts to preset A, recycles and advances separate batch counter one count. At a preset number of batches output B is activated until batch counter is reset. At any time the display can be made to flash the batch total by pressing ENT while the unit is running. Activating CLR while the batch total is flashing resets the batch counter and the B preset output.

KEPTROL FEATURES

TIMER: Choose from 1 to 10,000 pulse per second or minute basic time base with accuracy to +.015 % and scale base from 0.0001 to 99.9999 to time in seconds, minutes, hours or days. Timing is controlled by positive edge of signal by one of three ways selected on the keypad:

Level: times while input B signal is high

Pulsed: One positive pulse on input B starts timer, second positive pulse on input B stops timer.

Start-Stop: Positive pulse on Input B starts timer, positive pulse on input A stops timer.

Once the timebase is selected and the timing started, the unit operates much as a counter. All the features listed under "Counter" are available with the timer. (See section under "Counter" operating modes)

RELAY: Control output timing is selected by pressing D until the RELAY mode is selected and entered. Time duration from .1 to 9.9 seconds (or 00 for latch output) may be entered for A and B outputs. Once the output has been activated, unit must be reset before another output will occur. The control output timing is independent of the counter/timer reset which is selected under its setup modes. In the rate mode of operation the outputs are active at or above the preset rate and return to the rest state when the reading drops below the preset rate.

KEPTROL FEATURES

LOCKOUT: Unauthorized front panel changes can be prevented by entering 4 digit code chosen by the user in the LOCKOUT setup mode. KEPtrol leaves the factory with a code of 1.000. (If a code of less than 4 digits is entered, unit adds prefix "0's" to make a 4 digit code.) This code should be recorded in a safe place. Entering the code in the setup mode does not disable the keypad, but keying in the 4 digit code while in the run mode will activate "LOCK ON". The status of the unit and set points can be checked but "LOCK ON" appears if any changes are attempted. Only by keying the 4 digit code into the keypad will the unit return to the "LOCK OFF" status.

OUTCARD: RS232 or RS422 serial 2 way communication options are available. Up to 15 units can be linked together and addressed separately to transmit unit status or accept new set points in the standard ASCII format. Baudrates of 300,600,1200, 2400, 4800 or 9600 as well as choice of odd, even, space or mark parity can be selected by keypad control.
Both RS 232 and RS 422 options feature a separate data request "Strobe" input to simplify interface to a printer or other peripheral device.
Selection of data to be transmitted is done by 3 data select lines. A simple pulse or contact closure causes the KEPtrol to transmit the selected data on the RS 232 or RS 422 lines.

Opt 1: RS 232 serial interface
Opt 2: RS 422 serial interface.

4.0 Decoding Part Number

EXAMPLE	KP8	A	3A	2	A	2	Price

Series
KP8

Operating Voltage
A: 110 Vac +/- 15% or 12 to 27 VDC
B: 220 Vac +/- 15% or 12 to 27 VDC

Control Inputs
1A: Quad (x2) 5-30 VDC
1B: Quad (x4) 5-30 VDC
2A: Simultaneous, 3 to 30 VDC
10KHz max., Count and rate models only
3A: Standard, High impedance, Up/down control:
3 to 30 VDC, 100KHz max. Use for all models.
3B: As 3A, with 4.7K Ohm pull up resistors.
3C: As 3A, with separate Up / Down inputs.
3D: As 3C, with 4.7K Ohm resistors.
4A: Standard Opto-isolated up/down control
5 to 12 VDC: 1500Hz max. Use for all models.
4B: As 4A, except 12 to 24 VDC
9A: Quadrature, 3 to 30 VDC, 20KHz max.
Count and rate models only.

Control Outputs
1: Open collector (NPN)
2: SPDT relay 10A

Input Speed
A: 0-40 Hz (relay or snap action switch), inputs 2,3,4,9
C: 0-400 Hz (reed switch), inputs 2,3,9
D: 0-1500 Hz (opto-solid state), input 4
E: 0-10 KHz (solid state), inputs 2,3,9
F: 0-20 KHz (quad solid state), input 9
G: 0-100KHz (hi-speed solid state), input 3

Options
1: RS232 serial interface
2: RS422 serial interface
5R: RS422M serial interface (repeat mode)
5M: RS422M serial interface (multi-drop mode)

Accessories
#19141 - Watertight gasket kit
#36120 cover - Flex cover
#Amp 1 - 20 Millivolt Amplifier

5.0 Dimensions

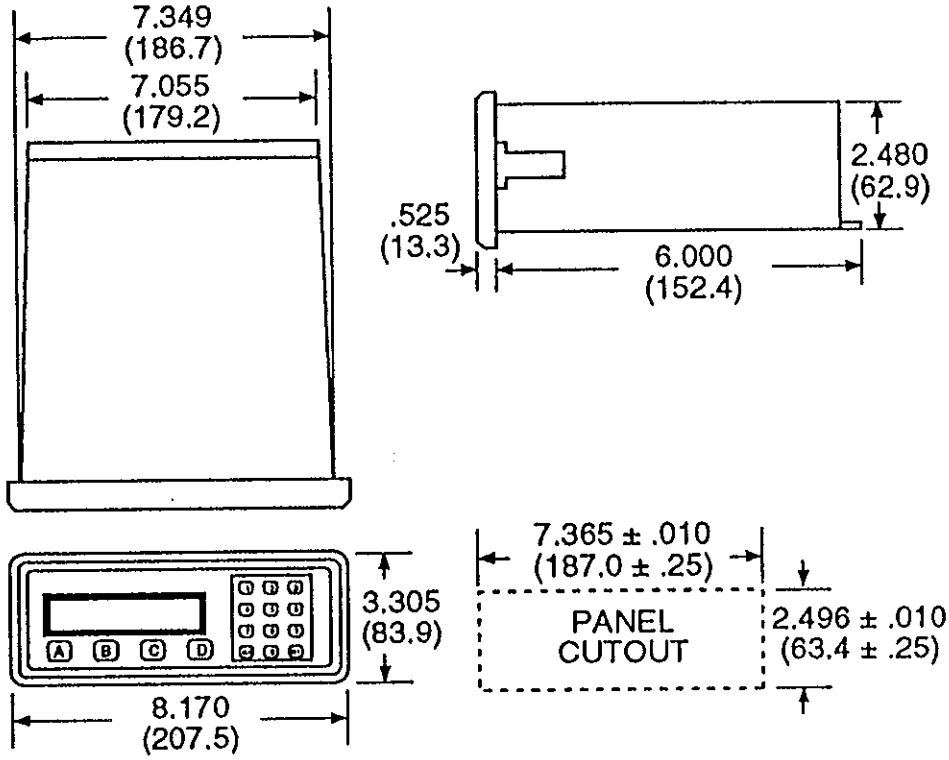

6.0 Wiring Terminations

1 - OPTO INPUT COMMON
2 - NOT USED
3 - INPUT B (CNT DN, UP/DN CTRL, START)
4 - INPUT A (CNT UP, RATE, TIME STOP)
5 - RESET INPUT
6 - NOT USED
7 - NOT USED
8 - NOT USED
9 - NOT USED
10 - NOT USED
11 - GROUND (-DC)
12 - GROUND (-DC)
13 - 12 VOLTS OUT
14 - DC POWER IN
15 - ISOLATED -12 VOLTS OUT
16 - ISOLATED +12 VOLTS OUT
17 - AC INPUT
18 - AC INPUT
19 - PRESET B TRANSISTOR
20 - PRESET A TRANSISTOR

1 - N.O.
2 - N.C. — **A**
3 - COMMON
4 - N.O.
5 - N.C. — **B**
6 - COMMON

7.0 INPUT OPTIONS: Input characteristics (5th and 6th digit of part number). All input signal conditioning is done on plug in modules mounted directly behind the display. Most are, themselves, capable of being switch programmed for specific input characteristics. The 5th digit of the part number indicates the basic module board used. The 6 digit of the part number indicates switch settings that specify input characteristics. The 8th digit of the part number indicates switch settings that specify the amount of input signal filtering designated by maximum speed and based on a pulse of 50% on/off. The inputs specified at the time of order have been set before the unit was shipped. If other input characteristics are needed, changes can be made by authorized personnel who are requested to update the part number when changes are made. (See Section 8.2 "Removing the Case" to gain access to the input cards.)

7.1 Input 2A Switchable Options: Input 2A (5th and 6th digit of part number) uses board number 2102 and accurately counts pulses on Input A (count up) and Input B (count down), even if they are simultaneous. Switches S1 to S4 determine debounce filtering and the max. input control speed per second, designated by 8th digit in part number. For best filtering use slowest setting that meets requirement.

PROGRAM SWITCH 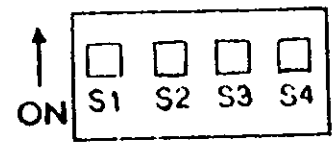

( ) indicates speed code, 8th digit of number
(A) 0- 40Hz (min. 12.5 msec on/off) S3, S4-on; S1, S2-off
(C) 0- 400Hz (min. 1.25 msec on/off) S1, S2-on; S3, S4-off
(E) 0- 7.5KHz(min. 0.066 msec on/off) S1, S2,
S3, S4-off

7.1.1 Input 2A Wiring: Control input 2A uses -DC (pin 12) as input reference and requires a sourcing device (PNP) or pull up resistor to drive the inputs to 3 to 30VDC. If a dry contact is used, wire switch between pin 13(+12VDC) and inputs.
Counter: Apply input pulses to Input B (pin 3) to count down. Apply pulses to Input A (pin 4) to count up.
Rate: No rate.
Timer: This input not designed for time control inputs.

7.2 High Impedance Inputs 3A, 3B, 3C, 3D Switchable Options: Inputs 3A-3D (5th and 6th digit of part number) use input board number 2097B.

Input 3A has S3, S4-off
Input 3B has S3-off, S4-on
Input 3C has S3-on, S4-off
Input 3D has S3, S4-on

PROGRAM SWITCH

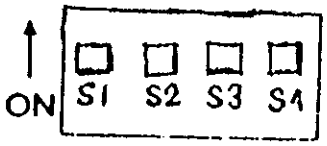

S3 - Controls the direction control modes:
  S3-off, Up/down control on Input B
          Pulses, on Input A
  S3-on, Separate up pulses on Input A
          Separate down pulses on Input B

S4 - Controls sink or source input:
  S4-off, normal 10K Ohm to -DC, requires
          sourcing input
  S4-on, Inputs A, B have internal pull up
          4.7 K Ohm to 5VDC, requires
          sinking input

S1, S2 determine debounce filtering and control max input speed per second, designated by 8th digit in part number. For best filtering use slowest setting that meets requirement.

( ) indicates speed code, 8th digit of part number

(A) 0- 40Hz (min. 12.5 msec on/off) S1, S2-on

(C) 0-400Hz (min. 1.25 msec on/off) S1-on, S2-off

(G) 0-100KHz(min. 5 usec on/off) S1, S2-off

7.2.1. Input 3A Wiring: If control input 3A is selected, inputs are referenced to -DC (pin 12) and must be driven to 3 to 30 VDC with a sourcing device (PNP), a pull up resistor or dry contact between +12VDC (pin 13) and the inputs.

Counters: Wire Input B (pin 3) to direction control of shaft encoder as KEP 715-2 or switch to +12VDC (pin 13) Wire Input A to pulse device. If input B is open or low (0 to 1VDC), counter counts down on negative edge of Input A (pin 4). If input B is high (3 to 30 VDC) counter counts up on negative edge of Input A.

Rate: Apply input pulses to input A (pin 4).

Timer: For "LEVEL" or "PULSED" timing control, apply positive level or pulse to Input B (pin 3). For "STR-STP" timing control, apply positive "Start" pulse to Input B and "Stop" pulse to Input A (pin 4).

7.2.2 Input 3B Wiring: If control input 3B is selected, inputs A and B have internal 4.7 K Ohm pull up resistors to +5VDC, designed to work with sinking drive devices [(open collector NPN, TTL, or dry switch to -DC (pin 12)]. Reset input (pin 5) does not have an internal pull up resistor and requires a sourcing device or dry contact between reset input and +12VDC (pin 13).
Counter: Wire input B (pin 3) to direction control of shaft encoder or switch to -DC (pin 12). Wire Input A (pin 4) to a pulse device or contact to -DC (pin 12). If input B is open or high (3 to 30 VDC) counter counts up on negative edge of Input A. If Input B is low (0 to 1VDC) counter counts down on negative edge of Input B).
Rate: Apply pulses or contact to -DC (pin 12) on Input A.
Timer: Note that input 3B has pull up resistors and must be switched to -DC. They become active if positive or open. For "LEVEL" or "PULSED" timing control, apply positive level or pulse to Input B (pin 3). For "STR-STP" timing control, apply positive "Start" signal to Input B and "Stop" signal to Input A (pin 4).

7.2.3 Input 3C Wiring: If control input 3C is selected, inputs must be driven to 3 to 30 VDC with a sourcing device (PNP), a pull up resistor or dry contact between +12 VDC (pin 13) and inputs.
Counter: Wire inputs for up counting pulses to Input A (pin 4) Wire inputs for down counting pulses to Input B (pin 3). Unit counts on negative going edge. Inputs must be normally low. (If Input A is high, Input B counts up on positive edge. If Input B is high, Input A counts down on positive edge.)
Rate: Apply pulses to input A (pin 4).
Timer: This input not designed for time control inputs.

7.2.4 Input 3D Wiring: If control input 3D is selected, inputs A and B have internal 4.7 K Ohm pull up resistors to 5 VDC designed to work with sinking drive devices [(open collector NPN, TTL, or dry switch to -DC (pin 12)]. Reset (pin 5) does not have a pull up resistor and requires a sourcing device or dry contact between reset input and +12VDC (pin 13).
Counter: Wire inputs for up counting pulses to Input A (pin 4). Wire inputs for down counting pulses to Input B (pin 3). Unit counts on negative edge. Inputs must be normally low. (If Input A is high, Input B counts up on positive edge. If Input B is high, Input A counts down on positive edge.)
Rate: Apply pulses to Input A (pin 4).
Timer: This input not designed for timer control inputs.

7.3 Opto-Isolated Inputs 4A, 4B, 4C, 4D

Switchable Options: Inputs 4A-4D (5th and 6th digits in part number) use opto-isolated input board number 2098, with input referenced to pin 1.

Input 4A has S1, S4-on; S3-off
Input 4B has S1, S3, S4-off
Input 4C has S1, S3, S4-on
Input 4D has S1, S4-off: S3-on

PROGRAM SWITCH

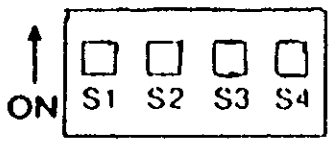

S1, S4 Control input voltage range.
S1, S4-on: 5 to 12 VDC, S1, S4-off: 12 to 24 VDC

S3 Controls the count direction control mode.
S3-on: Up/down control on Input B, pulses on Input A
S3-off: Separate up pulses on Input A, separate down pulses on Input B.

S2 determines debounce filtering and controls max. input speed per second designated by 8th digit in the part number: For best filtering use slowest setting that meets requirement:
(A) 0- 40Hz (min. 12.5msec on/off) S2-on
(D) 0-1500Hz (min. .33 msec on/off) S2-off

7.3.1 4A, 4B, 4C, 4D Opto-Isolated Features:
These inputs have opto-isolators on Inputs A, B, and reset to block electrical noise that may cause erratic failures. All inputs are referenced to pin 1 and are not connected to -DC. Use an external 5 to 24VDC supply to drive the inputs. The -DC of the external supply must be connected to pin 1. If an external supply is not available, some isolation is gained by connecting pin 15 to pin 1 and pulsing with isolated +12 VDC of pin 16.

7.3.2 Inputs 4A (+5 to +12 VDC), 4B (+12 to +24VDC) Wiring
Use pin 1 as common and pulse with a sourcing device, (PNP), a pull up resistor or dry contact from +DC supply.
Counter: Wire Input B (pin 3) to direction control or switch to +DC supply. Wire Input A (pin 4) to pulsing device. If Input B is open or low, counter counts down on negative edge of Input A. If Input B is high, counter counts up on negative edge of Input A.
Rate: Apply input pulses to Input A (pin 4).
Timer: For "LEVEL" or "PULSED" timing control, apply positive level or pulses to Input B (pin 3). For "STR-STP" timing control, apply positive "Start" signal to Input B and "Stop" signal to Input A (pin 4).

7.3.3 Input 4C(+5 to +12VDC), 4D(+12 to +24VDC) Wiring: Use pin 1 as common and pulse with a sourcing device, (PNP), a pull up resistor or dry contact from +DC of supply.

PRESET A _ _ _ _ _ _ _ _

PRESET B _ _ _ _ _ _ _ _

SCALING _ _ . _ _ _ _

RELAY ☐

DURation of A (0.0-9.9) _ . _

DURation of B (0.0-9.9) _ . _

OUTCARD ☐

UNIT (00-15) _ _

ParalleL ☐ or SERial ☒

BAUDRATE
- 300 ☐
- 600 ☐
- 1200 ☐
- 2400 ☐
- 4800 ☐
- 9600 ☐

PARITY
- SPACE ☐
- EVEN ☐
- ODD ☐
- MARK ☐

Time base

MINutes ☐ or SEConds ☐

1/	10000	1000	100	10	1

LEVEL ☐ PULSED ☐

Separate STaRt and SToP ☐

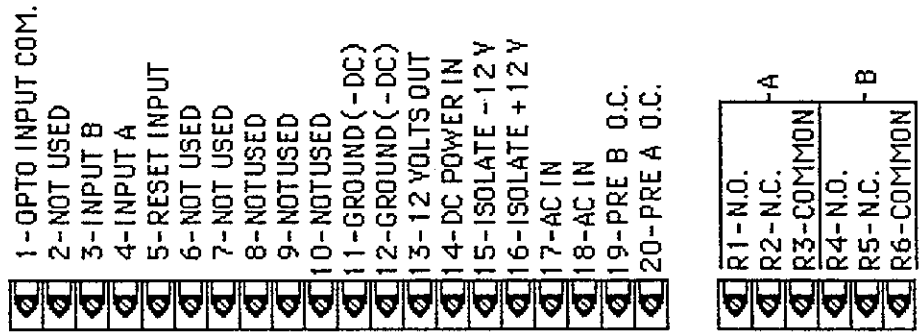

99242 3/18/94

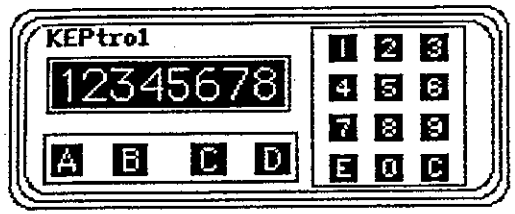

KEPtrol WORKSHEET

MODEL # _____

SERIAL# _____

UNIT# _____

LOCKOUT CODE __ __ __ __

RATEMETER ☐

WEIGHT (0.0-9.9) __.__

WINDOW (02-24) ____

SIGnificant

FIGures (1-6) ____

COUNTER ☐

Reset to 0 —— ☐

Set to Preset – ☐

AUTo RECycle ☐

ALTernate

ACTion —— ☐

MANual RESet ☐

BATCHER —— ☐

TIMER ☐

Reset to 0 —— ☐

Set to Preset – ☐

AUTo RECycle ☐

ALTernate

ACTion —— ☐

MANual RESet ☐

BATCHER —— ☐

DECimal LOCation (0-8) # 8 ☐ # 7 ☐ # 6 ☐ # 5 ☐ # 4 ☐ # 3 ☐ # 2 ☐ # 1 ☐ 0 NONE ☐

Counter: Wire input for up counting pulses to Input A (pin 4). Wire input for down counting pulses to Input B (pin 3). Unit counts on negative edge. Inputs must be normally low, (If Input A is high, Input B counts up on positive edge. If Input B is high, Input A counts down on positive edge.)
Rate: Apply pulses to Input A (pin 4).
Timer: This input not designed for time control inputs.

7.4 Quadrature Input 9A Switchable Options:
Input 9A (5th and 6th digit of part number) accepts quadrature pulses 90° out of phase. It uses input board number 2135.

PROGRAM SWITCH

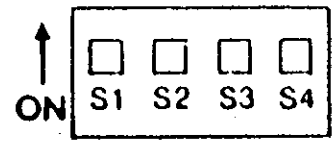

S1, S2 determine debounce filtering and control max. input speed, per second designated by the 8th digit in the part number. For best-filtering use slowest setting that meets requirements.

(A) 0- 40Hz (min. 12.5 msec on/off) S1, S2-off, S3, S4-on
(C) 0-400Hz (min. 1.5 msec on/off) S1, S2-on, S3, S4-off
(F) 0- 20KHz(min.0.025 msec on/off) all off

7.4.1 Input 9A Wiring

Counter: Inputs use pin 12 as common and require a 3 to 30 VDC signal from a sourcing device, (PNP) or pull up resistor. Wire quadrature output of shaft encoder, such as KEP 716, to Input A (pin 4) and Input B (pin 3). Input A precedes Input B to count up. (If direction is not as desired reverse inputs.) Counter accepts 1 input for each pulse on Input B. If X2, X4 or other multiplier is needed, change "Scaling" with front keypad.

Rate: Apply inputs to Input B

Timer: This input not designed for time control inputs.

7.5 Analog Input Used With KEPtrol ("5" in. 5th digit of part number)

The KEPtrol can operate with any of the 5A to 5E analog input boards used in the BATCHtrol and can be ordered as part of the KEPtrol by specifying the desired input type numbers in the 5th and 6th digits of the part number.

The analog signal is wired into Pin 4 (+) and Pin 12 (-). It controls the rate meter or counter. Input Pin 3 controls the count direction or the time input. Note: The timer mode of the KEPtrol with analog input only works with the "Level" or "Pulse" control mode; not with the "Start" "Stop" mode.

Order Code (5th & 6th digit of order number)	Input Function	Opt. Board-Order Number
5A	4-20mA	BA8ANA4-20mA
5B	0-20mA	BA8ANA0-20mA
5C	1-5VDC	BA8ANA1-5VDC
5D	0-5VDC	BA8ANA0-5VDC
5E	0-10VDC	BA8ANA0-10VDC

The current loop or voltage input is converted to a highly linear 0 to 10K Hz frequency. This frequency can then be multiplied by any number from 0.0001 to 99.9999 to read out in desired units of measure.

Count Scaling

Find the multiplier scaling number for the counter by calculating the quantity that should be displayed in 1 second with max. input (20mA, 5V, 10V). Divide this quantity by 10,000. This is the scaling number to enter into the KEPtrol for the counter mode. Eg. 20mA from meter is 6,000 gal. per min. Quantity per sec. is 100 gal. (6,000 divided by 60). The scaling number is .01 (100 divided by 10,000).

Rate Scaling

Find the rate that should be displayed at the max. input (20mA, 5V, 10V). Divide this by 10,000. This is the scaling number to enter into the KEPtrol for the rate mode. Eg. 10V from meter is 50 gal. per min. The scaling multipler to enter into the KEPtrol is 0.005 (50 divided by 10,000).

8.0 I/O Board Installation/Modification:

8.1 Control Relay - Driver Card

The optional output driver card is designed to be inserted into the back of the case on the right hand side without opening the case. Insert the relay card into the track, insuring that the connector mates with the four (4) pins. The card is held in by a screw on the right-hand side.

8.2 Removing the Case

To install or change the input or data interface cards, the case must be removed. Before opening case, remove all power. CMOS logic is used. Use standard precautions against damage by static discharge. If unit has a relay control card, loosen but do not remove the screw on side of case and remove relay card. If the unit has a data interface option cable (RS232/422, etc.), two screws in the back, designed to secure the top left connector, may have to be removed. Next remove the six (6) flat head 4-40 X 1/4" screws behind the panel and lift off the panel/lens assembly. Slide the main board/display out the front of the case. Once modifications are made, reverse the procedure to re-assemble the unit, insuring that the main board is in the track. The six (6) screws that hold the panel must be tight to seal the rubber keypad panel assembly, approximately 6 in" lb. torque.

8.3 Input Card Modification

Follow "Removing the Case" procedure (Section 8.2). The Input card is mounted just behind the display and plugs onto the 15 pin post connector. Remove the board and make desired changes as described in Section 9. When installing the input card, insure that the component side of the board is facing the front and that the 15 pin connector is mated to the proper pins and not offset to the side.

8.4 Data Interface Installation - RS232/422

Follow "Removing the Case" procedure (Section 8.2). The RS232 and R422 cards have a 15 contact ribbon cable that plugs into the female connector next to the heat sink. Choose the proper interface card. With components on top and subminiture connector to the back plug in the harness and mount the card on the four (4) standoffs provided. After the main board is inserted into the case, replace the front panel per Section 8.2.

9. Outcard - RS232/RS422 Serial/Strobe Interface

If the serial interface option is supplied, up to 15 units can be linked together. (See "Strobe Input Operation", Section 9.8, to link more than 15 units.) Unit status and new set points can be communicated by remote hook-up. Mode changes, however, must always be made on the front keypad. Data is transmitted at selected baud rates using standard seven bit ASCII characters and parity with two additional bits of "Start" and "Stop" to make up the standard ten bit character. (See "Outcard", Section 9 of "KEPtrol Keypad Functions" to select and enter desired Code Number, Baud Rate, and Parity).

9.1 Unit Code

Each KEPtrol in the hookup must be assigned a code number from 1 to 15 through the front keypad in the "Outcard" set up mode. Number "00" is reserved for a dedicated hookup to only one terminal and its transmit output line remains in an "on" active state. (Units assigned other numbers have outputs that remain in the "off" high impedance state until addressed by their code number or brought on line by positive edge of Strobe input). Once a unit is addressed, do not address another unit until the data has been entered, a "Carriage Return" has been sent and any data requested has been transmitted back.

9.2 Baud Rate

The baud rate is the speed at which data is transmitted, expressed in bits per second. Baud rates of 300, 600, 1200, 2400, 4800, or 9600 are available. Use the front keyboard to call up the "Outcard" set up mode and select the desired baud rate that is compatible with the remote terminal.

9.3 Parity

Parity is a bit of information that is inserted before the stop bit used to help check that the transmission is correct.

In the "Outcard" set up mode, select between "Odd" (Parity bit is logical zero if total number of logical 1's in the first seven data bits is odd), "Even" (Parity bit is logical zero if total number of logical 1's in the seven data bits is even.), "Mark" (Parity bit always logical 1 - high/Mark), "Space" (Parity data bit always logical 0 - low/Space). If a "Mark" parity is chosen, it will appear that two (2) stop bits are used. Use the "Mark" parity with terminals using parity "OFF" or "NONE". These terminals ignore the parity. KEPtrol does not check the parity but does transmit the parity chosen. If the parity requirements of the interface terminal are not known, it is often practical to key in a different parity until the correct one works.

9.4 RS232 Electrical Requirements

KEPtrol uses standard EIA specifications. Standard inputs must present a load of 3000 to 7000 Ohms. A voltage level of +3V to +25V (referenced to signal ground) is read as a "Space" or "0" and indicates an active state (asserts a control line). A voltage level of -3 to -25V is read as a "Mark" or "1" and does not indicate an active state (does not assert a control line). Outputs must send a voltage of +5 to 25V (referenced to signal ground) for a "Space" and a voltage of -5 to -25V for a "Mark" when loaded with a 3000 Ohm load to signal ground. Outputs must be capable of being shorted to other signal lines without burning out. It is normally recommended that cable length be limited to 50 feet.

9.5

RS422 Electrical Requirements

The input of the KEPtrol RS422 follows the standard E1A high impedance minimum of 12K Ohms. When the 422+ (A) input is more positive than 422- (B) input by .2V to 6V, a "0" or "space" is recognized. Data is recognized by the polarity of the voltage difference between the two lines. Noise picked up on the line will make little difference since the noise is usually added to each line, and the voltage differential remains the same. The output driver drives the lines the transmit lines to a differential of 2 to 6V. It is designed to handle loads up to 60mA of sink or source current and features positive and negative current limiting for protection from line fault conditions. Since the RS422 is more immune to noise, cable links up to 1000 feet or more can be used. Because of the high input impedance of RS422, line terminating loads are recommended. For hook up to a single unit, a 150 to 200 Ohm resistor across Receive Data + and - at the KEPtrol and at the remote terminal is often sufficient. For multiple hook up, other standard terminations should be used. Total loading should not be more than 90 Ohms.

9.6 RS232/RS422 Serial Input Codes

DXX(S) (Device and address number followed by space) activates the KEPtrol that had been assigned that number. That unit comes on line and transmits "Device XX:". Unit is now ready to receive a code or string of codes separated by a space. A "Carriage Return" (Enter) code enters the codes and processing of requests begins.

DB (Display Batch request: Unit will transmit number of batches counted.)

DC (Display count request: Unit will transmit count number.)

PA (Preset A request: Unit will transmit Preset A number.)

PA(S)XXX (Preset A enter: Unit will load up to 8 digit number into Preset A memory.)

PB (Preset B request: Unit will transmit Preset B.)

PB(S)XXX (Preset B enter: Unit will load up to 8 digit number into Preset B memory.)

RB (Reset Batch counter to 0 and reset output if in Batcher mode; otherwise, no effect.)

RB(S)XXX (Unit will set Batch count to number sent. No other change is made. This function is available only with serial interface. Code has no effect if not in Batcher mode.)

RC (Reset counter to zero if in "RO" mode (adding) or set counter to preset A if in "SP" mode (subtracting), output is reset.

RC(S)XXX (Unit will set counter to number. No other change is made. This function is available only with serial interface.)

SC (Scaling factor request: Unit will transmit the Scaling number.)

SC(S)XXX (Scaling factor enter: Unit will load scaling from 99.9999 to .0001 into memory.)

9.7 Serial Interface Operation

Data is received and transmitted over standard EIA RS232 or RS422 levels. Each 10 bit character is made up of a start bit, 7 bit ASCII code, parity bit and stop bit. Unit number, baud rate and parity are entered in the "Outcard" set up mode and remain in memory even if power is off.

Note that the input impedance of RS232 is 3K to 7K Ohm, 3K Ohm worst case. The terminal addressing the KEPtrols must be capable of driving all loads in the loop. RS422 input impedance is much higher and there is usually no problem driving 15 units. The KEPtrol serial transmit line remains in a high impedance "Off" state until addressed. Insure that only one unit is addressed at a time.

To address a KEPtrol unit, transmit a "D" (device) followed by the 1 to 15 code number and a "Space". Once the "Space" has been received, the KEPtrol becomes active and responds back, "Device XX:" (Device number). (Once active, the unit works in a full duplex, echo back mode, so that data sent from the terminal will be transmitted back for verification.) Once the unit is "on line", use the proper serial transmit codes to request data or set a new value (See RS232/RS422 Serial Input Codes, Section 9.6). Up to 80 characters of data may be linked together and transmitted to the KEPtrol in a string as long as there is a space between the different codes. If an error is made, a correction can be made by back spacing and retyping correct data before the "Carriage Return" (Enter) is sent. Once "Carriage Return" (Enter) is sent, the KEPtrol starts processing the data and will transmit the requested data on a non-priority basis over the data transmit line. A KEPtrol keypad entry or incoming data will halt the data communication cycle. Therefore, there should be a pause after data is requested to insure that all data has been transmitted before another unit is addressed and brought on line. (If the KEPtrol is not busy, it should not require more than 5msec. to process each request. To find the cycle time to process and transmit a request, calculate the bit transmit time by dividing 1 by the baud rate; multiply that by 80 (8 characters each; 10 bits per character); add 5msec. to this product and multiply by the number of requests made. Example: Typical time to transmit 1 uninterrupted request at 300 baud rate is .272 sec. (1-300) X (80) +.005.

This time will be extended if the KEPtrol must service the front keypad or one of the inputs. In practice if transmission has not started within 2 seconds after data is requested, it can be assumed that there is a problem.)'

When transmitting, the KEPtrol will precede each data value with a "Carriage Return" and "Line Feed" code and answer only with requested data in the order the requests were made. After all requested data has been transmitted, any new communication must be started again by DXX (Device number) and space.

Following are two examples of requests and responses.

Transmit from terminal (S) = Space	Receive from KEPtrol
D13(S) [KEPtrol #13 Activated]	Device #13
PA(S)76546(S)PA(S)	PA 76546 PA
PB(S)1575(S)PB(S)	PB 1575 PB
SC(S)1.0000(S)SC(S)	SC 1.0000 SC
RC(Enter)	RC
[KEPtrol presets and scaling are set, counter is reset]	76546 1575 1.0000

D7(S) [KEPtrol #7 Activated]	Device #7
PA(S)12347(S)PA(S)	PA 12347 PA
RC(S)456789(S)DC(S)	RC 456789 DC
RB(S)376(S)DB(Enter)	RB 376 DB
[KEPtrol preset, counter, and batch are set.]	12347

9.8 Strobe Address Operation

Another method of reading the status of a unit with either a RS232 or RS422 option is by means of a separate strobe address and a 3 bit data request code. Use of the strobe address method does not allow the input of new set points but theoretically hundreds of units could be linked together to transmit the data in the KEPtrol over the serial transmit line in the standard RS232 or RS422 format. The KEPtrol units could be assigned any code number other than "00".

The 3 bit data request code would be latched in at the positive edge of a 3 to 30VDC strobe input that remained high, a minimum of 25 milliseconds. Requests are processed on a non-priority basis.

Normally data will begin to be transmitted from the KEPtrol over the RS232 or RS422 serial transmit line within 5 msec. unless interrupted by a keypad entry or other signal input.

No other unit should be brought on line until data requested has been received. After the strobe input has been high, a minimum of 25 msec., and data has been latched, the strobe can be brought low and the 3 bit data request code changed; however, another strobe should not be generated until the requested data has been transmitted by the KEPtrol.

9.9 Strobe Input Electrical Requirements

Both the RS232 and RS422 interface option cards have inputs that allow data to be requested over a separate strobe input and a 3 bit data request code input. Any number of the 3 data request code lines can be linked in parallel as long as the source can drive the combined load of all inputs linked together (1.5K Ohm divided by the total number linked together). Data is transmitted over the serial lines using standard RS232 or RS422 characteristics. Strobe and data request inputs are positive true with signal ground as reference:

Strobe Input Levels

0 or low:	Open or 0 to 1 VDC
1 or high:	3 to 30 VDC
Impedance:	1.5K Ohm

Strobe Input Codes (Octal Code)

0: PA (Preset A request)
1: PB (Preset B request)
2: SC (Scaling of counter request)
3: DC (Display of count request)
4: DB (Display of batch request)

WIRING HOOKUP
RS 232 / STROBE
(SUB-D 25 PIN CONN.)

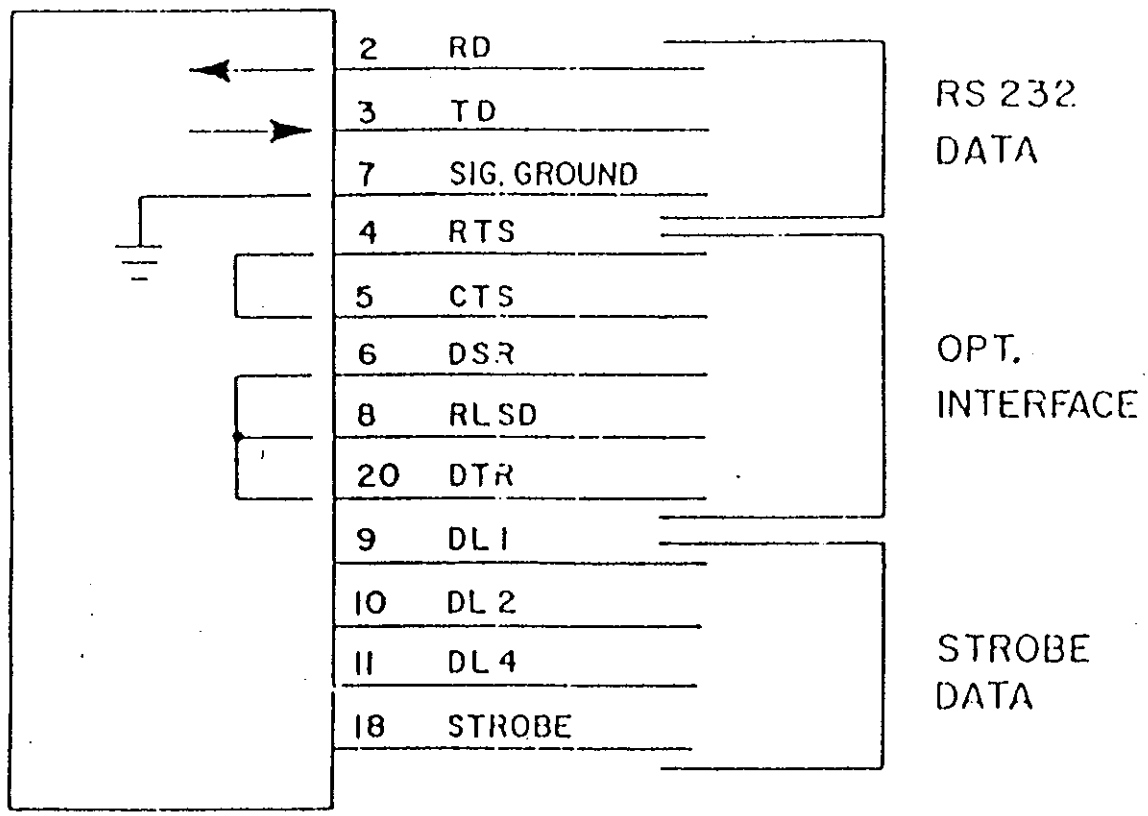

9.10 Strobe Input Wiring

The KEPtrol RS232 option has a subminiature D 25 pin female connector and is wired as a DCE (Data Communications Equipment) device. If it is connected to a DTE (Data Terminal Equipment) device, the interconnect cable should have wires 2 and 3 connected straight to the same pins on each end. If it is connected to another DCE device, Pins 2 and 3 must be crossed so that the wire to Pin 2 on one end goes to pin 3 on the other end and pin 3 on one end goes to pin 2 on the other end.

9.10.1 RS232 Wiring

KEPtrol requires only three wires for RS232 communication: pin 7 (Signal Ground), pin 2 (Receive Data), pin 3 (transmit Data). Pin 4 (Request To Send) and pin 5 (Clear To Send) are jumped internally to echo back the signals. Pins 6 (Data Set Ready), 8 (Received Line Signal Detector) and 20 (Data Terminal Ready) are also jumped internally to echo back any signal.

9.10.2 Strobe Wiring (of RS232 25 Pin Connector)

The 3 data lines to generate the request code (DL 1: pin 9, DL 2: pin 10, 2: DL 4: pin 11) must be set and remain constant while the positive strobe of at least 25 milliseconds is given on the strobe input (pin 18). Data is transmitted in RS232 serial format on Transmit Data Line (pin 3).

9.11 RS422/Strobe Input Wiring

The KEPtrol RS422 option has a subminiature D 37 pin female connector and is wired as a DCE (Data Communication Equipment) device. It is designed to be connected to a DTE (Data Terminal Equipment) device. If it must be connected to a DCE device, it will be necessary to cross wires 4 and 6 as well as 22 and 24 at one end of the connector harness.

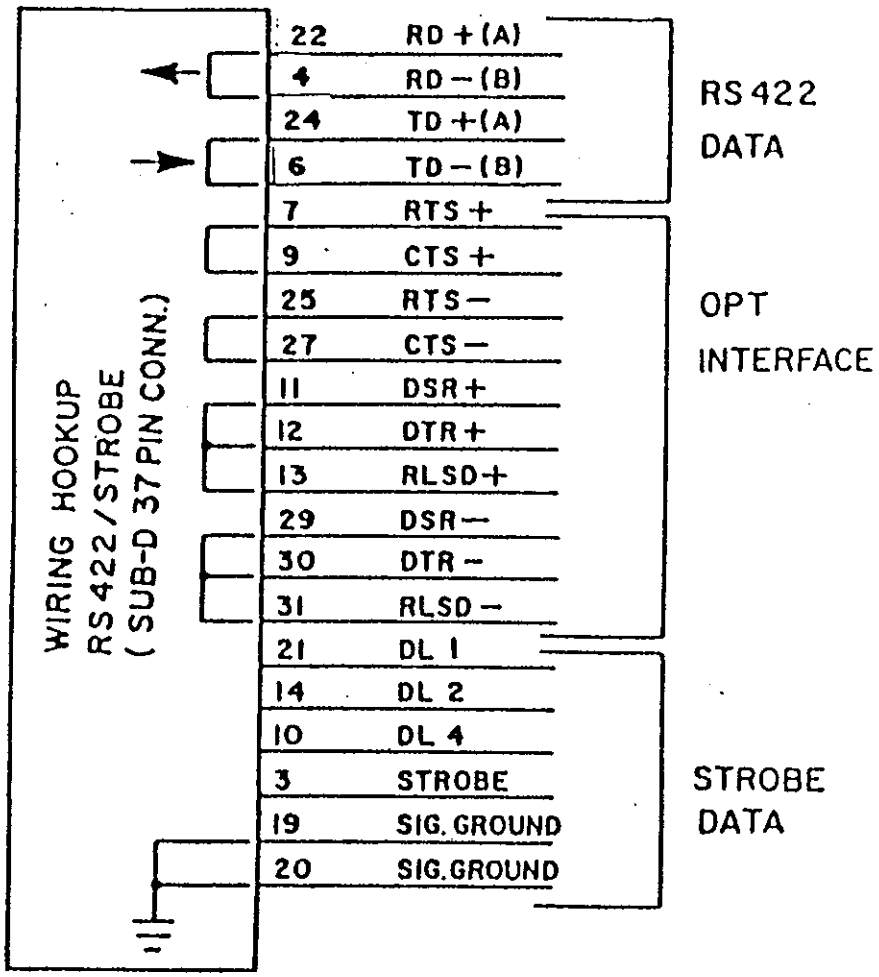

9.11.1 RS422 Wiring

KEPtrol requires only 4 wires for RS422 communications: pin 4 [Receive Data +(A)], pin 22 [(Receive Data -(B)]), pin 6 [(transmit Data +(A)], pin 24 [(Transmit Data -(B)]. The following groups of pins have been jumped internally to echo back the signals: (7, 9), (25, 27), (11, 12, 13), (29, 30, 31). Signal ground (pins 19, 20) do not need to be connected but may be used as a reference if desired.

9.11.2 Strobe Wiring (of RS422 37 pin connector)

The 3 data lines to generate the request code (DL1: pin 21, DL2: pin 14, DL4: pin 10) must be set and remain constant while the positive strobe of at least 12 milliseconds is given on strobe input (pin 3). Data is transmitted in RS422 serial format on Transmit Data Lines (pins 6-24).

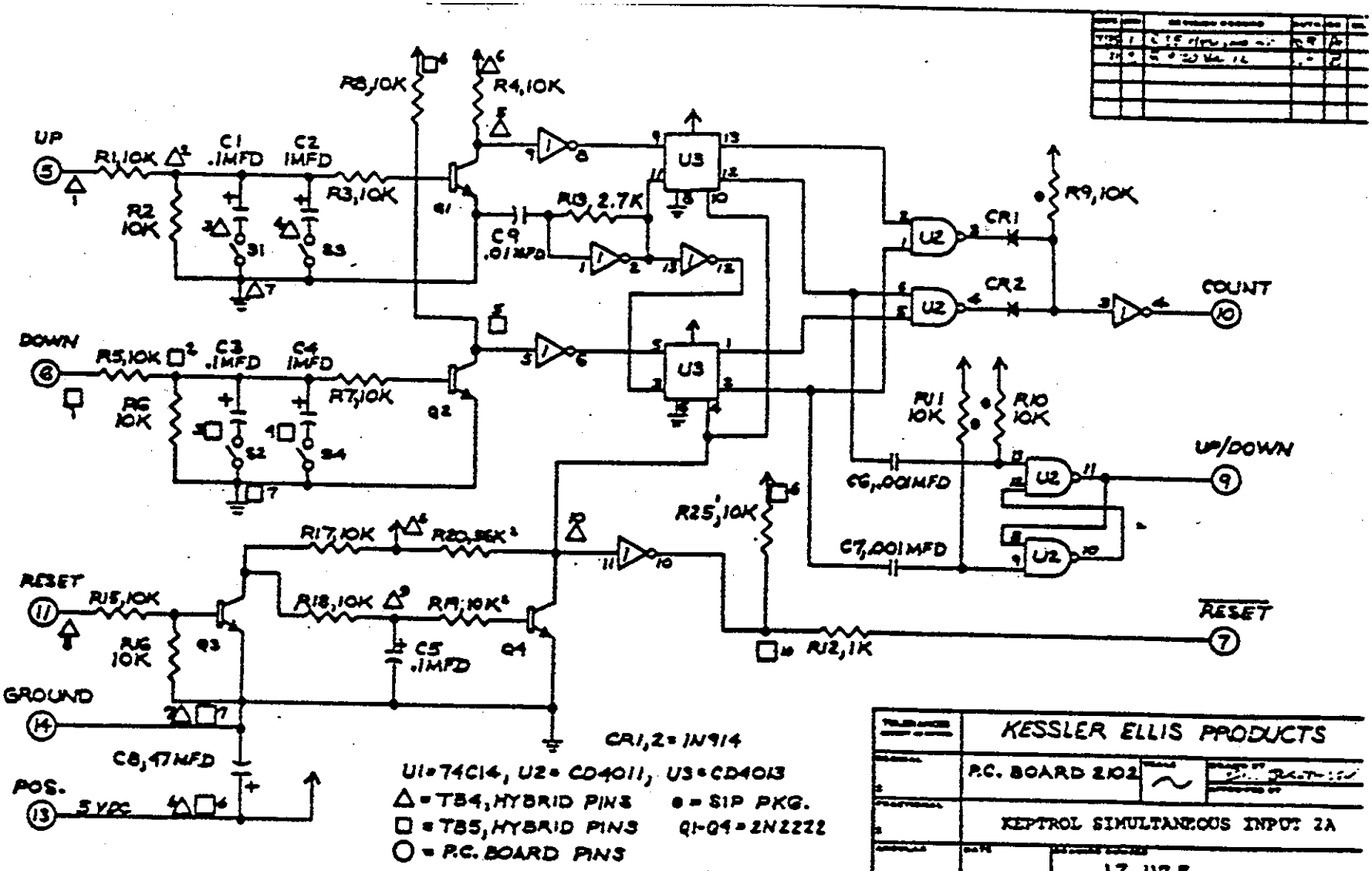

Analog Input 20155B Pin 3 Controls "Time" level, pulse on/off
NO-STR-STP, Pin 5 RESET_RATE from Analog
COUNT from Analog Pin 3 high up, low down.

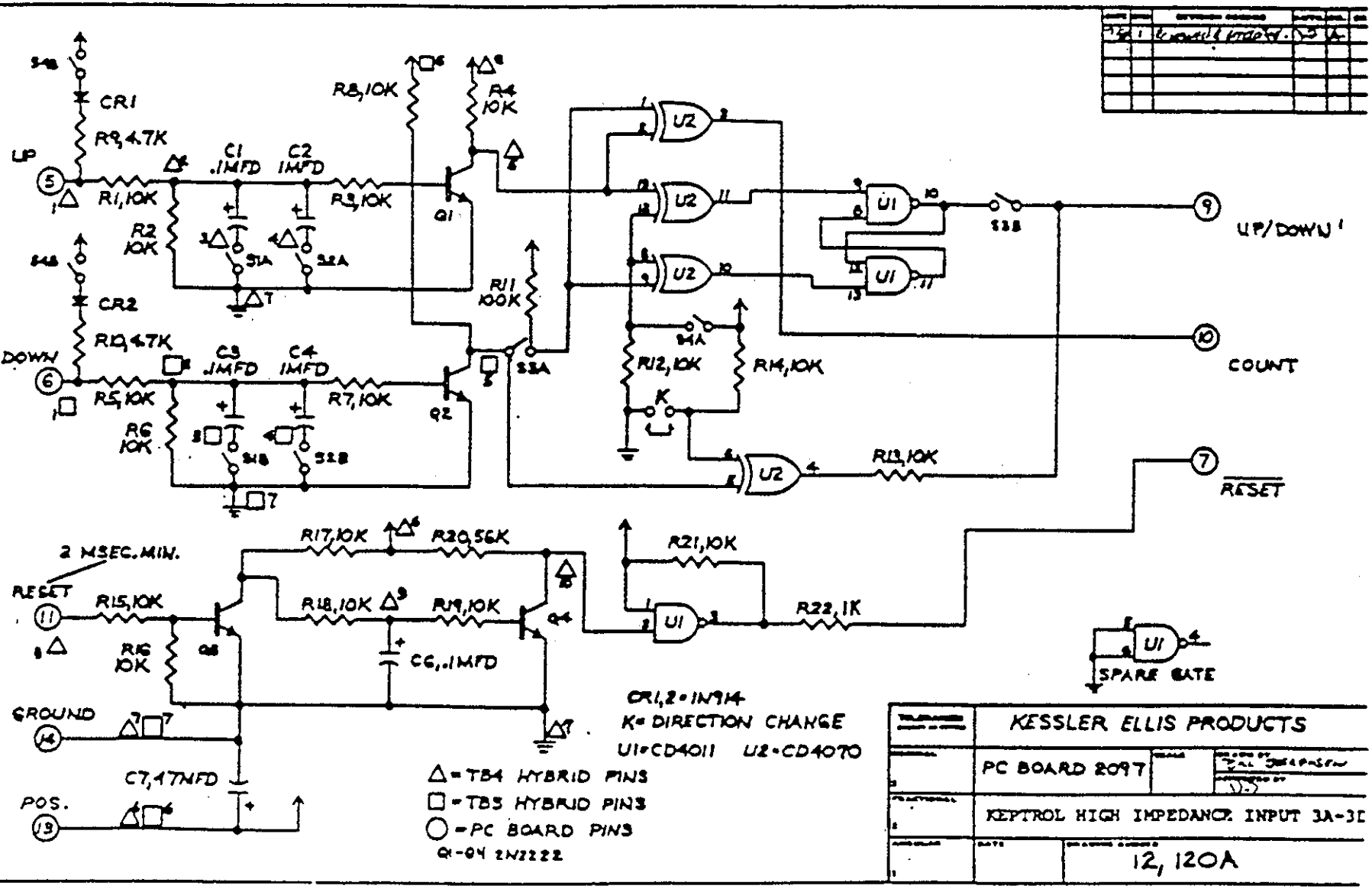
UP
DOWN
RESET
GROUND
POS.
CR1
CR2
R9,4.7K
R10,4.7K
R1,10K
R2 10K
R5,10K
R6 10K
R8,10K
R4 10K
R3,10K
R7,10K
C1 .1MFD
C2 1MFD
C3 .1MFD
C4 1MFD
Q1
Q2
S1A
S2A
S1B
S2B
S3A
S3B
S4A
R11 100K
R12,10K
R14,10K
R13,10K
K
U1
U2
COUNT
UP/DOWN
2 MSEC. MIN.
R15,10K
R16 10K
R17,10K
R20,56K
R18,10K
R19,10K
R21,10K
R22,1K
Q3
Q4
C6,.1MFD
C7,47MFD
SPARE GATE
CR1,2 = IN914
K = DIRECTION CHANGE
U1 = CD4011 U2 = CD4070
△ = TB4 HYBRID PINS
□ = TB5 HYBRID PINS
○ = PC BOARD PINS
Q1-Q4 2N2222
KESSLER ELLIS PRODUCTS
PC BOARD 2097
KEPTROL HIGH IMPEDANCE INPUT 3A-3I
12, 120A

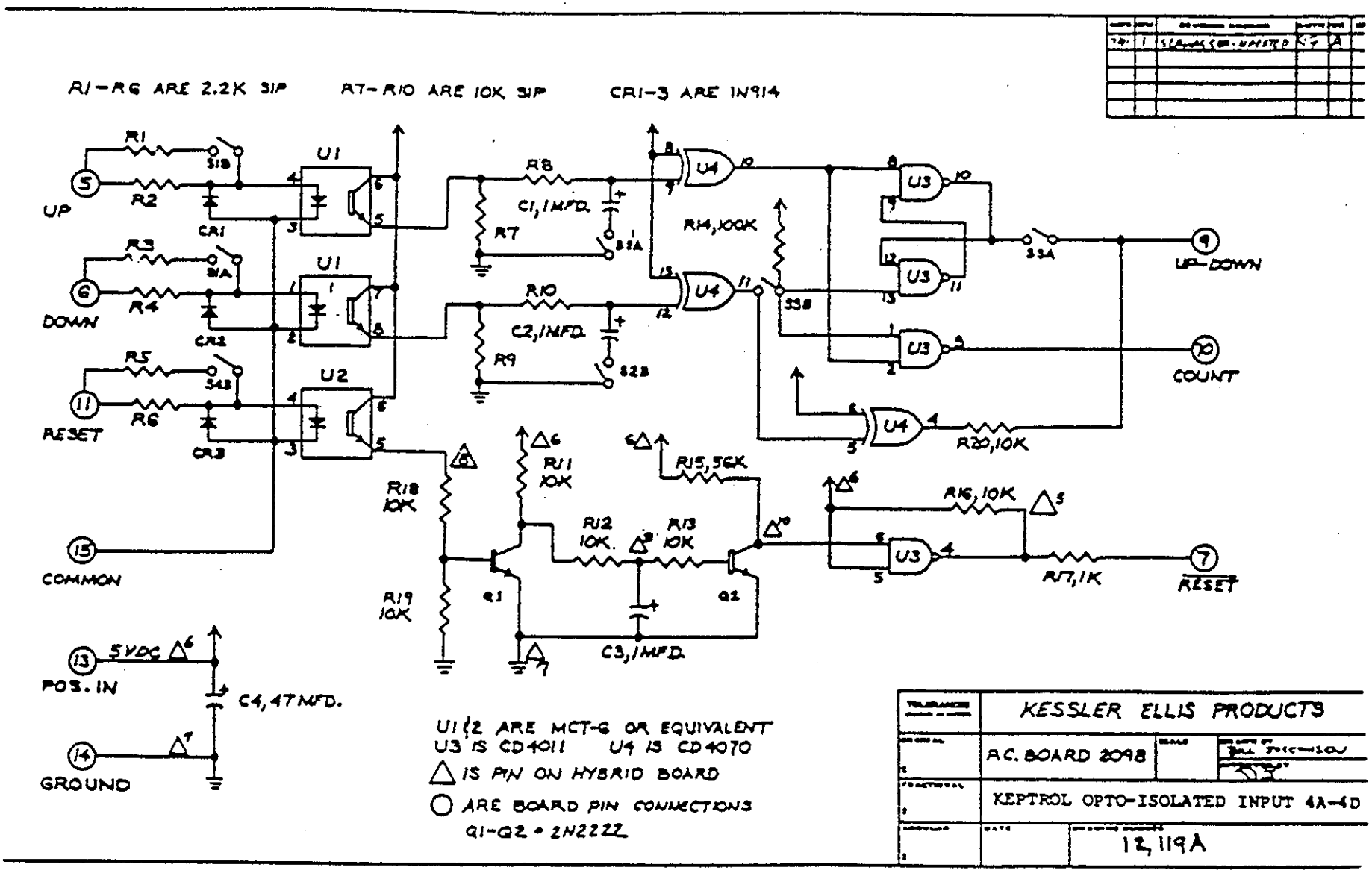
R1-R6 ARE 2.2K SIP
R7-R10 ARE 10K SIP
CR1-3 ARE 1N914
UP
DOWN
RESET
COMMON
POS. IN
GROUND
5VDC
C4, 47MFD.
U1
U2
U3
U4
R1
R2
R3
R4
R5
R6
CR1
CR2
CR3
S1B
S1A
S2A
S2B
S3A
S3B
R7
R8
R9
R10
C1, 1MFD.
C2, 1MFD.
R14, 100K
R20, 10K
R15, 56K
R16, 10K
R17, 1K
R18 10K
R19 10K
R11 10K
R12 10K
R13 10K
C3, 1MFD.
Q1
Q2
UP-DOWN
COUNT
RESET
U1 & 2 ARE MCT-6 OR EQUIVALENT
U3 IS CD4011 U4 IS CD4070
△ IS PIN ON HYBRID BOARD
○ ARE BOARD PIN CONNECTIONS
Q1-Q2 = 2N2222
KESSLER ELLIS PRODUCTS
P.C. BOARD 2098
KEPTROL OPTO-ISOLATED INPUT 4A-4D
12,119A

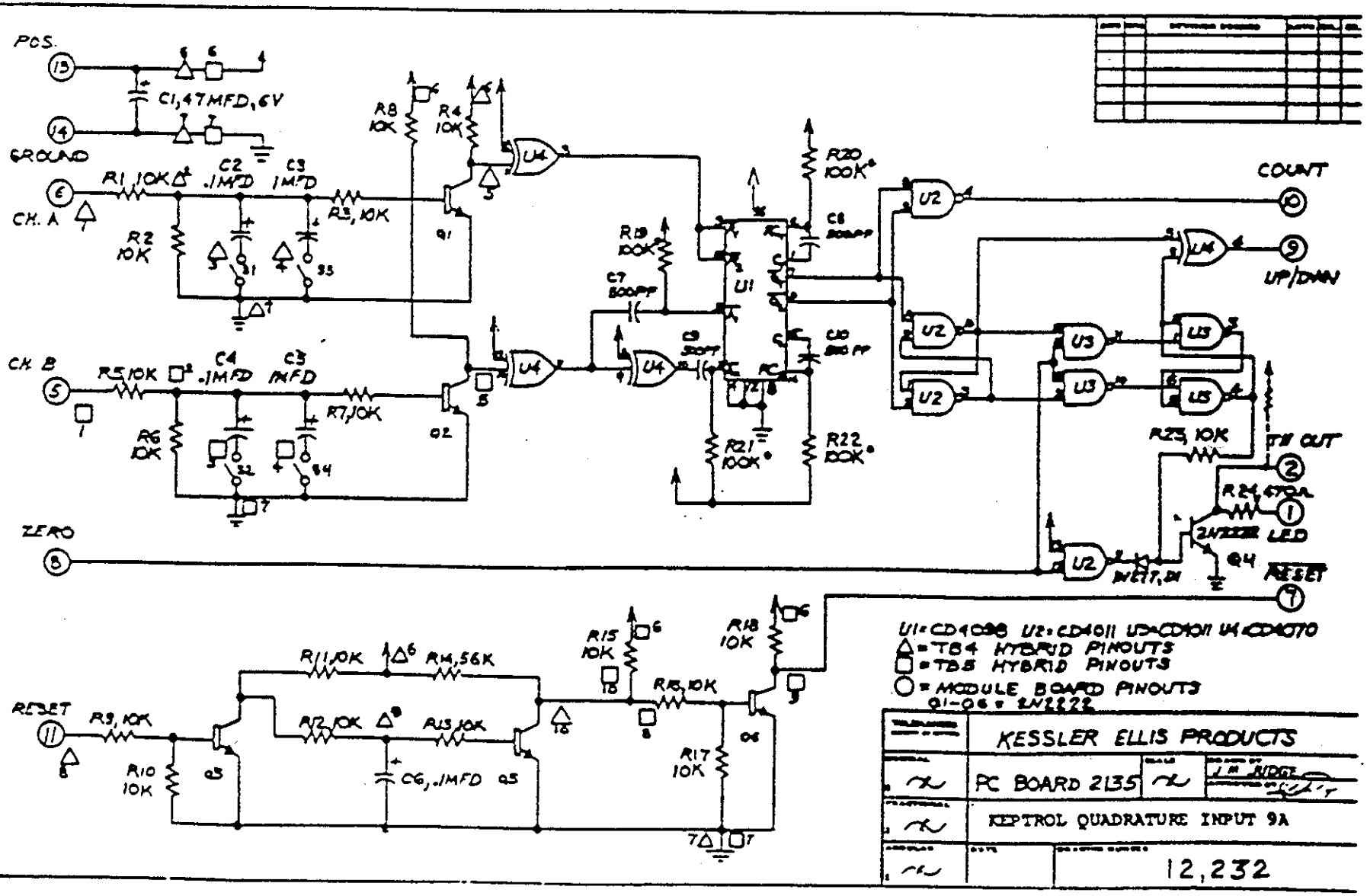
POS.
C1,47MFD,6V
GROUND
CH. A
R1,10K
C2 .1MFD
C3 1MFD
R2 10K
R3,10K
R8 10K
R4 10K
Q1
CH. B
R5,10K
C4 .1MFD
C3 1MFD
R6 10K
R7,10K
Q2
ZERO
R20 100K
R19 100K
C7 500PF
C8 500PF
C9 500PF
C10 500 PF
U1
R21 100K
R22 100K
COUNT
UP/DWN
R23, 10K
STR OUT
R24, 470Ω
LED
Q4
RESET
R11,10K
R14,56K
R12,10K
R13,10K
C6, .1MFD
R9,10K
R10 10K
Q3
R15 10K
R16,10K
R18 10K
R17 10K
Q5
U1=CD4098 U2=CD4011 U3=CD4011 U4=CD4070
△=T64 HYBRID PINOUTS
□=T65 HYBRID PINOUTS
○=MODULE BOARD PINOUTS
Q1-Q6 = 2N2222
KESSLER ELLIS PRODUCTS
PC BOARD 2135
J.M. RIDGE
KEPTROL QUADRATURE INPUT 9A
12,232

We hope you will be as pleased with our products as our many satisfied customers. If you have any questions concerning our Warranty, repair, modification or returned goods process, please contact your local KEP distributor or the KEP Customer Service Department.

WARRANTY

Kessler-Ellis Products Co. warrants its products against defects in materials and workmanship for a period of two (2) years from the date of shipment to Buyer.

The Warranty is limited to repair or replacement of the defective unit at the option of KEP. This Warranty is void if the product has been altered, misused, dismantled, or otherwise abused.

ALL OTHER WARRANTIES, EXPRESSED OR IMPLIED, ARE EXCLUDED, INCLUDING BUT NOT LIMITED TO THE IMPLIED WARRANTIES OF MERCHANTABILITY AND FITNESS FOR A PARTICULAR PURPOSE.

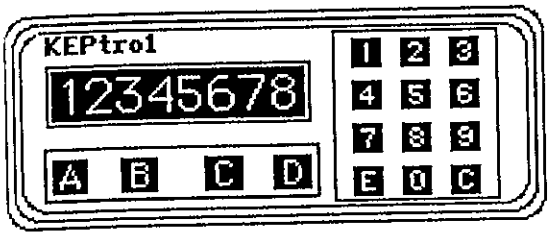

KEPtrol WORKSHEET

MODEL # _____

SERIAL# _____

UNIT# _____

LOCKOUT CODE _ _ _ _

RATEMETER ☐

WEIGHT (0.0-9.9) _._

WINDOW (02-24) _ _

SIGnificant

FIGures (1-6) _

COUNTER ☐

Reset to 0 _ ☐

Set to Preset - ☐

AUTo RECycle ☐

ALTernate

ACTion _ ☐

MANual RESet ☐

BATCHER _ ☐

TIMER ☐

Reset to 0 _ ☐

Set to Preset - ☐

AUTo RECycle ☐

ALTernate

ACTion _ ☐

MANual RESet ☐

BATCHER _ ☐

DECimal LOCation (0-8) # 8 ☐ # 7 ☐ # 6 ☐ # 5 ☐ # 4 ☐ # 3 ☐ # 2 ☐ # 1 ☐ 0 NONE ☐

Time base

MINutes ☐ or SEConds ☐

1/	10000	1000	100	10	1

PRESET A _ _ _ _ _ _ _ _

PRESET B _ _ _ _ _ _ _ _

SCALING _ _ . _ _ _ _

LEVEL ☐ PULSED ☐

Separate STaRt and STOP ☐

RELAY ☐

DURation of A (0.0-9.9) _ . _

DURation of B (0.0-9.9) _ . _

OUTCARD ☐

UNIT (00-15) _ _

ParallelL ☐ or SERial ☒

BAUDRATE 300 ☐

600 ☐

1200 ☐

2400 ☐

4800 ☐

9600 ☐

PARITY

SPACE ☐

EVEN ☐

ODD ☐

MARK ☐

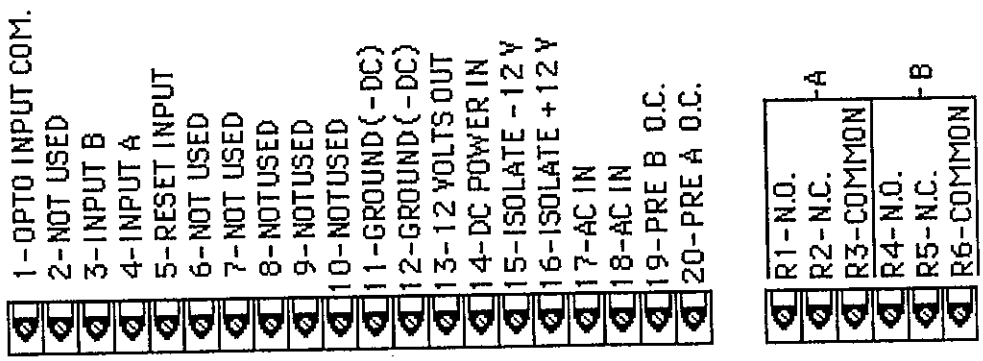

99242 3/18/94