PRODUCT INFORMATION

DOSIC®

THE COMPACT STAINLESS-STEEL SENSOR FOR FLEXIBLE FLOW MEASUREMENT

Flow sensors

SICK
Sensor Intelligence.

PRECISE MEASUREMENTS IN CHALLENGING ENVIRONMENTS

DOSIC® - the compact stainless-steel flow sensor

The non-contact DOSIC® ultrasonic flow sensor is used to detect the flow volume of conductive and non-conductive liquids and can measure liquids in a variety of different industries, as well as in high-stress and hygienic environments. Thanks to its space-saving, compact size, the DOSIC® can be perfectly integrated into any machine environment.

8020377/2019-04-16
Subject to change without notice

TECHNOLOGY FOR GREATER FLEXIBILITY AND EFFICIENCY

It's so much easier to go with the flow. The DOSIC® harnesses this principle, using an ultrasonic beam to measure the transit time of a liquid in the direction of flow.

Two configurable digital inputs/outputs and analog outputs and an IO-Link interface to a superordinate control unit ensure that you get just the right start position. Furthermore, no special calibration process is required prior to taking a measurement.

The seal-free, self-draining measuring tube also significantly enhances the reliability of the measuring process.

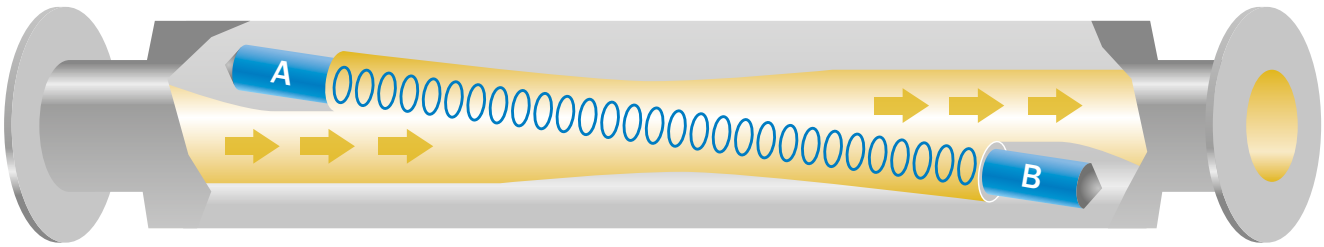

The DOSIC® uses ultrasonic technology to measure the flow of variable liquids in their direction of flow.

SO MANY APPLICATIONS, SO MANY BENEFITS: A SUMMARY

The new DOSIC® ultrasonic flowmeter from SICK offers a flexible, efficient, cost-effective option for measuring flow. In addition to having a hygienic, compact, robust design, the sensor is also easy to install and operate.

Hygienic design

- Meets the highest standards of hygiene: EHEDG-certified and FDA-compliant
- The straight measuring tube prevents deposits from forming
- The lack of moving components in the sensor ensures process reliability
- The IP67 and IP69 enclosure rating means that a high-pressure cleaner can be used to clean the sensor
- High product service life thanks to high-quality stainless steel
- CIP and SIP-resistant

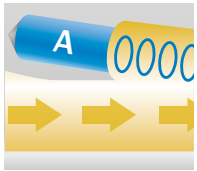

Ultrasonic technology

- Measures non-conductive liquids precisely
- Non-contact measurement, i.e. there is no contact between the sensor and the flow media
- Alternative to a Coriolis mass flow meter

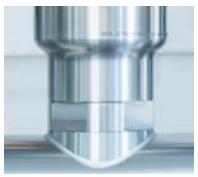

A robust, compact design

- Suitable for demanding production environments and aggressive liquids
- High-quality stainless-steel housing for extreme durability
- The seal-free measuring tube reduces maintenance effort
- Compact design means the sensor can be integrated into the most confined of spaces

Plug-in and measure

- Initial medium calibration replaced by automatic sensor calibration
- The IO-Link 1.1 interface communicates with the machine environment (Industry 4.0)
- The integrated display makes the flow sensor easier to operate
- Media temperature and monitoring of the density via time of flight principle

8020377/2019-04-16
Subject to change without notice

Flow measurement for the food industry

Task:

- Monitoring the flow of drinking chocolate, beer, olive oil, demineralized water etc.

Special features of the product in this application:

- Detects conductive and non-conductive liquids
- EHEDG-certified and FDA-compliant

Use in CIP/SIP systems

Task:

- Monitoring the flow of cleaning agents

Special features of the product in this application:

- CIP and SIP-resistant
- High measurement accuracy
- Non-corrosive stainless steel

Flow measurement in cooling circuits

Task:

- Monitoring the flow of cooling water

Special features of the product in this application:

- High measurement accuracy
- Easy to commission

THE COMPACT STAINLESS-STEEL SENSOR FOR FLEXIBLE FLOW MEASUREMENT

Product description

The non-contact DOSIC® flowmeter detects the flow volume of conductive and non-conductive liquids based on ultrasonic technology. With its measurement channel and stainless-steel housing, the ultrasonic flowmeter is suitable for measuring tasks in hygienic environments. The compact and rugged design offers a wide variety of application possibilities, including in those where space restrictions or aggressive media play a role. Installation is quick and easy, and does not require medium calibration. The seal-free, self-draining measuring tube enhances process reliability. Up to two configurable digital and analog outputs as well as the IO-Link interface ensure the right initial situation. The DOSIC® is EHEDG-certified and FDA-compliant.

At a glance

- Flow measurement for water and oil-based liquids
- Seal-free stainless-steel 316L sensor with Ra ≤ 0.8
- Straight, self-draining measuring tube
- Compact design with short installation lengths
- Configurable digital outputs
- Temperature measurement
- IP67/69 enclosure rating, CIP/SIP-compatible, IO-Link version 1.1

Your benefits

- Flexible measurement system for all industries and liquids
- Versatile use for conductive and non-conductive liquids and temperature measurement
- Short installation lengths and a compact design enable installation in applications with limited space
- Food-safe thanks to rust-free stainless steel and hygienic design
- Quick installation without medium calibration
- User-friendly application thanks to rotatable housing and display
- Straight measuring tube reduces pressure loss, thus reducing energy costs

Additional information

→ www.sick.com/DOSIC

For more information, simply enter the link or scan the QR code and get direct access to technical data, CAD design models, operating instructions, software, application examples, and much more.

8020377/2019-04-16
Subject to change without notice

Detailed technical data

Features

	DN 15	DN 25
Measurement	Ultrasonic	
Medium	Conductive and non-conductive liquids	
Nominal width measuring tube	DN 15	DN 25
Process temperature	0 °C ... +95 °C, up to 143°C for 60 minutes for SIP process [1]	
Process pressure	–0.5 bar ... +16 bar	
Communication interface	IO-Link	
EHEDG approval	✔	
CULus certificate	✔	
RoHS certificate	✔	
FDA	✔	
Temperature measurement	✔	

[1] 0 °C ... +95 °C with flow and temperature measurement; up to 143°C only with temperature measurement.

Performance

	DN 15	DN 25
Minimim flow	≤ 0.5 l/min	≤ 1.5 l/min
Maximum flow	≤ 80 l/min	≤ 250 l/min
Inlet zone	5 x DN (7.5 cm)	5 x DN (12.5 cm)
Output zone	3 x DN (4.5 cm)	3 x DN (7.5 cm)
Conductivity	No limitation	
Accuracy of sensor element	± 1 % (From measured value) [1]	
Standard deviation	σ_V ≤ 0.7 % of measured volume [2]	
Reproducibility	0.5 %	
Resolution	10 ml/min	
Response time	12 ms	

[1] Under the following reference conditions: water 26 °C ± 2 K, 2.5 bar ± 0.5 bar, standard settings, DN15: 8 l/min ... 80 l/min, DN25: 25 l/min ... 250 l/min.

[2] Nominal volume between 100 mL and 2000 mL; DN15; 26 °C ± 2 K; settings (differ from default settings): Q2Func Pulse; Meas Mode Dynamc; Filter Off; Set (CutOff) 0.15 mL/min; Reset (CutOff) 0.05 L/min; PlsVal 100 µL).

Mechanics

	DN 15	DN 25
Process connection	Clamp (DIN 32676) DN 15 G ¾ DIN 11851 DN 15 ¾” NPT (depending on type)	Clamp (DIN 32676) DN 25 G 1 ¼ DIN 11851 DN 25 1 ¼” NPT (depending on type)
Wetted parts	Stainless steel 1.4404 (Ra ≤ 0,8 µm)	
Housing material	Stainless steel 1.4305	
Housing design	With viewing window made from PMMA (acrylic glass)	
Enclosure rating	IP67/IP69 (DIN EN 60529)	
Weight	Approx. 2 kg	Approx. 3 kg

Electronics

Supply voltage	12 V DC ... 30 V DC [1]
Power consumption	< 3 W without output load
Initialization time	≤ 5 s
Protection class	III
Electrical connection	Round connector M12 x 1, 5-pin / Round connector M12 x 1, 8-pin (depending on type)
Output signal	1 x analog output: 4 mA ... 20 mA, 2 x digital input or output (configurable) [2] [3] 2 x analog output: 4 mA ... 20 mA, 2 x digital input or output (configurable) [2] [3] (depending on type)
Output current	< 100 mA [4]
Output load	4 mA ... 20 mA, 500 ohms when Uv > 15 V, 350 ohms when Uv > 12 V
Lower signal level	3.5 mA ... 3.8 mA
Upper signal level	21.5 mA ... 20.5 mA
Digital output	≤ 100 mA
Impuls/frequency output	0 kHz ... 10 kHz
Signal voltage HIGH	> (Uv – 4 V)
Signal voltage LOW	< 3 V
Inductive load	< 1 H
Capacitive load	< 100 nF < 2.5 nF, IO-Link
EMC	EN 61326-2-3
Limit digital inputs	HIGH state voltage > 16.0 V LOW state voltage < 4.0 V
MTTF	> 63 years

[1] All connections are reverse polarity protected. Q_A and Q_B are short-circuit protected. Q1 and Q2 are short-circuit protected.
[2] Digital output configuration: PNP/NPN/push-pull/open collector.
[3] Selectable analog output: Flow/Temperature.
[4] There are 100 mA for each output PNP and NPN available.

Ambient data

Ambient operating temperature	0 °C ... +60 °C
Ambient storage temperature	–40 °C ... +80 °C

Type code

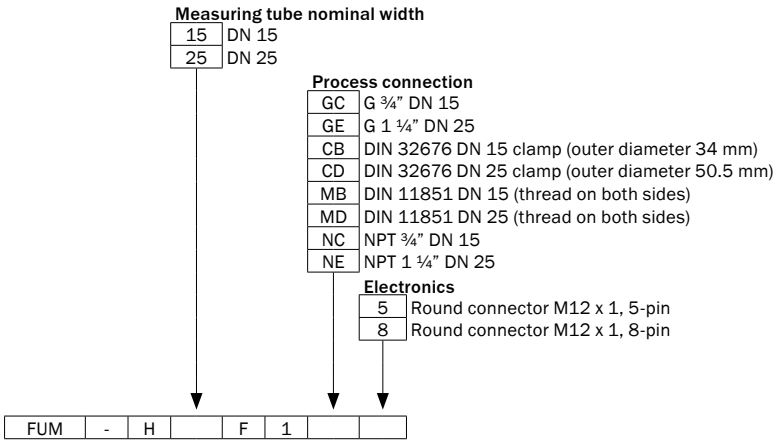

Not all variants of the type code can be combined!

Ordering information

- **Nominal width measuring tube:** DN 15
- **Maximum flow:** ≤ 80 l/min

Process connection	Electrical connection	Type	Part no.
Clamp (DIN 32676) DN 15	Round connector M12 x 1, 5-pin	FUM-H015F1CB5	1072035
G ¾	Round connector M12 x 1, 5-pin	FUM-H015F1GC5	1082021
DIN 11851 DN 15	Round connector M12 x 1, 5-pin	FUM-H015F1MB5	1082020
¾” NPT	Round connector M12 x 1, 5-pin	FUM-H015F1NC5	1082022
Clamp (DIN 32676) DN 15	Round connector M12 x 1, 8-pin	FUM-H015F1CB8	1082023
G ¾	Round connector M12 x 1, 8-pin	FUM-H015F1GC8	1082024
DIN 11851 DN 15	Round connector M12 x 1, 8-pin	FUM-H015F1MB8	1082025
¾” NPT	Round connector M12 x 1, 8-pin	FUM-H015F1NC8	1082026

- **Nominal width measuring tube:** DN 25
- **Maximum flow:** ≤ 250 l/min

Process connection	Electrical connection	Type	Part no.
Clamp (DIN 32676) DN 25	Round connector M12 x 1, 5-pin	FUM-H025F1CD5	1082027
G 1 ¼	Round connector M12 x 1, 5-pin	FUM-H025F1GE5	1082028
DIN 11851 DN 25	Round connector M12 x 1, 5-pin	FUM-H025F1MD5	1082029
1 ¼” NPT	Round connector M12 x 1, 5-pin	FUM-H025F1NE5	1082030
Clamp (DIN 32676) DN 25	Round connector M12 x 1, 8-pin	FUM-H025F1CD8	1082031
G 1 ¼	Round connector M12 x 1, 8-pin	FUM-H025F1GE8	1082033
DIN 11851 DN 25	Round connector M12 x 1, 8-pin	FUM-H025F1MD8	1082034
1 ¼” NPT	Round connector M12 x 1, 8-pin	FUM-H025F1NE8	1082035

Connection type and diagram

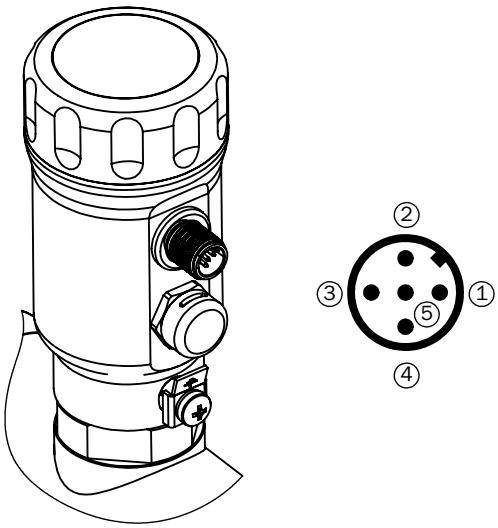

① L^+: Supply voltage
② Q_A: analog current output 4 mA ... 20 mA
③ M: Ground, reference potential for current output
④ C/Q1: Switching output/input 1, PNP/NPN/push-pull/open collector/IO-Link communication
⑤ Q2: Switching output/input 2, PNP/NPN/push-pull/open collector/frequency/pulse output

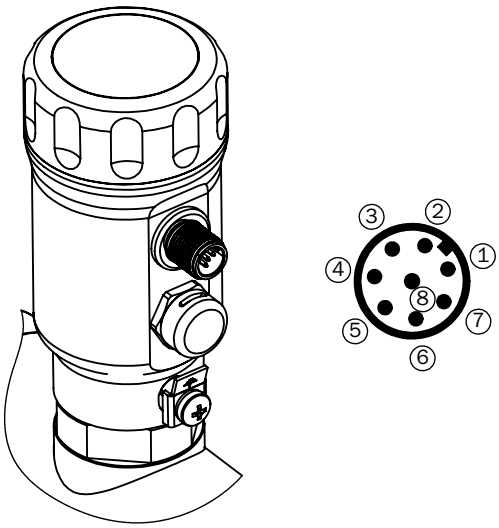

① L^+: Supply voltage
② Q2: Switching output/input 2, PNP/NPN/push-pull/open collector/frequency/pulse output
③ M: Ground, reference potential for current output
④ C/Q1: Switching output/input 1, PNP/NPN/push-pull/open collector/IO-Link communication
⑤ No function
⑥ No function
⑦ Q_A: analog current output 4 mA ... 20 mA
⑧ Q_B: analog current output 4 mA ... 20 mA

Dimensional drawing process connection

DIN 11851 DN 15

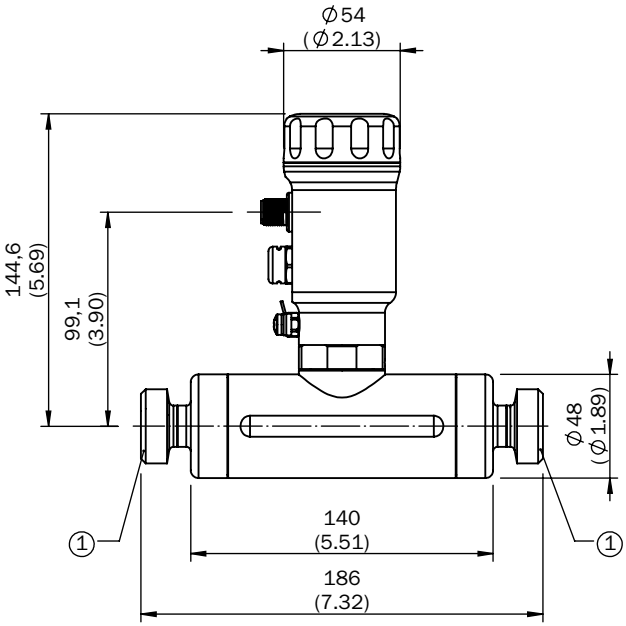

DN 15, G ¾

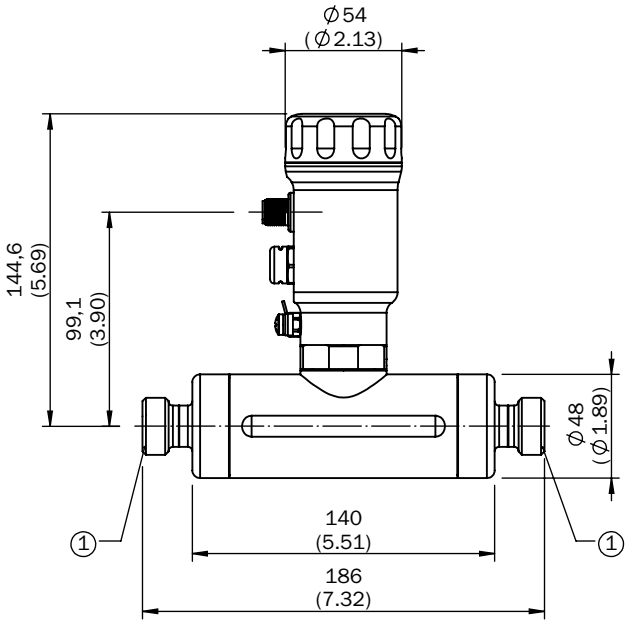

DN 15, ¾” NPT

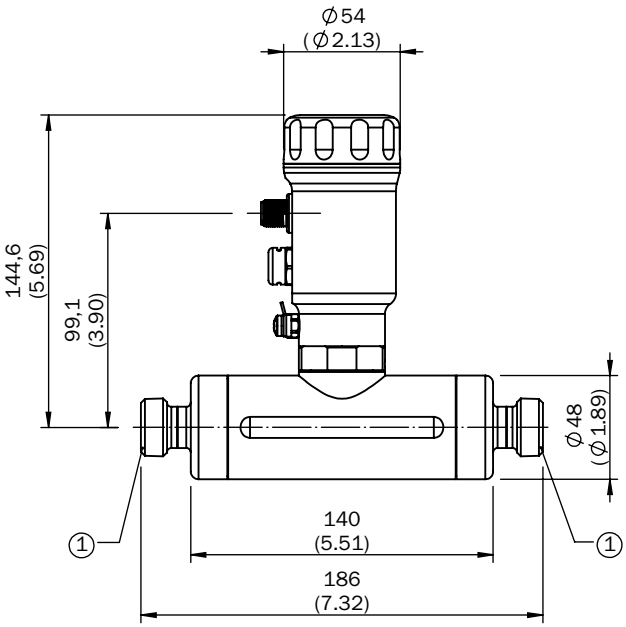

Clamp (DIN 32676) DN 15

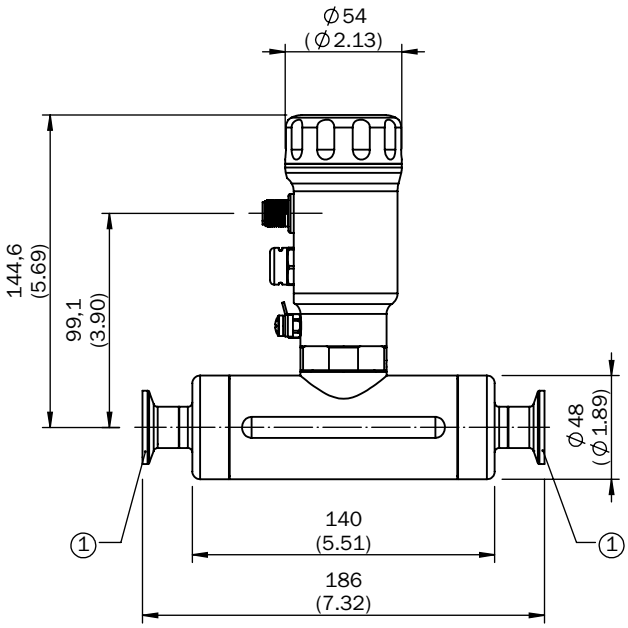

Clamp (DIN 32676) DN 25

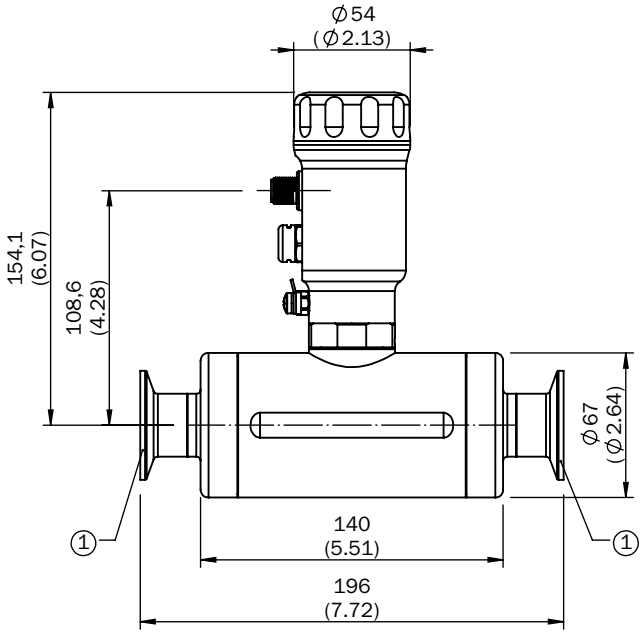

DN 25, G 1 ¼

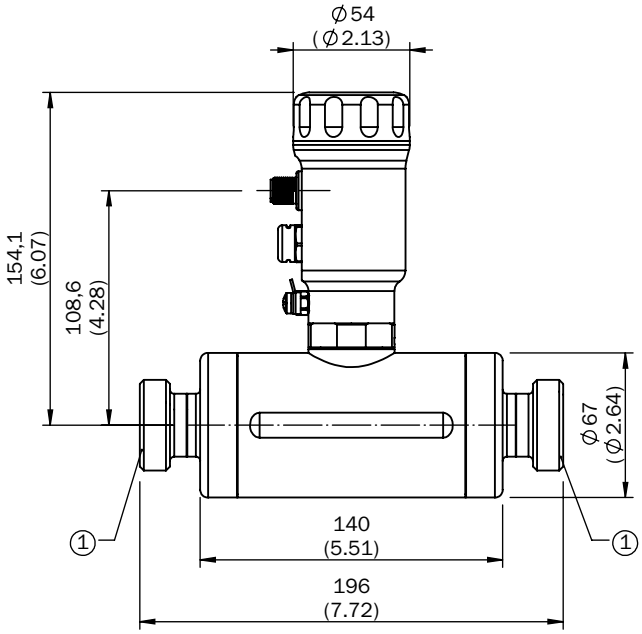

DIN 11851 DN 25

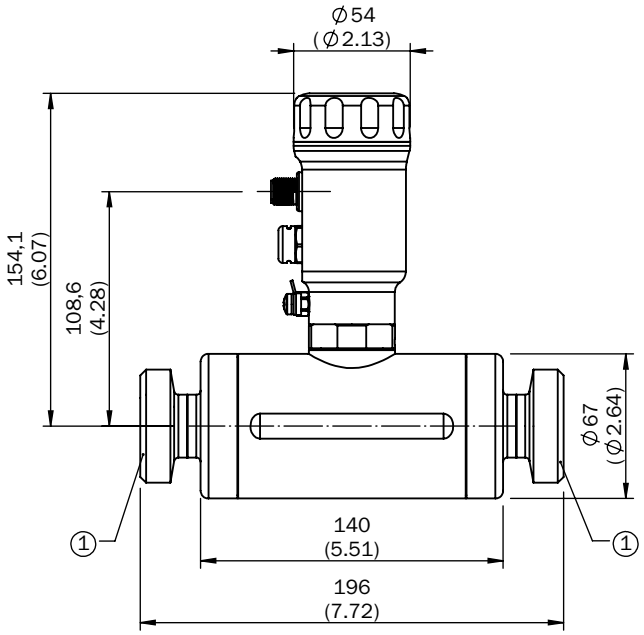

DN 25, 1 ¼” NPT

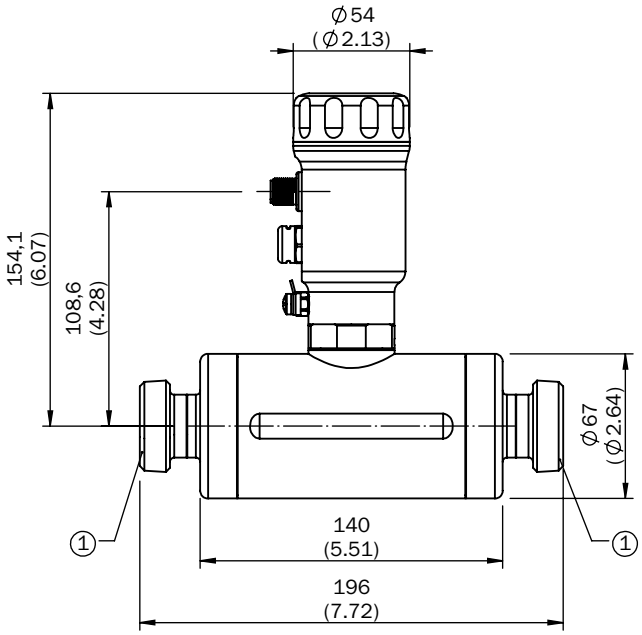

Recommended accessories

Connection systems

Modules and gateways

Connection modules

	Brief description	Type	Part no.
	IO-Link V1.1 Class A port, USB2.0 port, optional external power supply 24V / 1A	IOLA2US-01101 (SiLink2 Master)	1061790

Plug connectors and cables

Connecting cables

	Brief description	Length of cable	Type	Part no.
	Head A: female connector, M12, 5-pin, straight Head B: Flying leads Cable: PVC, unshielded, 5.2 mm [1] [2]	2 m	DOL-1205-G02MNI	6052625
		5 m	DOL-1205-G05MNI	6052626
		10 m	DOL-1205-G10MNI	6052627
	Head A: female connector, M12, 5-pin, straight, A-coded Head B: Flying leads Cable: Sensor/actuator cable, PUR, halogen-free, unshielded, 0.34 mm², 4.8 mm	2 m	YF2A15-020UB5X-LEAX	2095617
	Head A: female connector, M12, 5-pin, straight, A-coded Head B: Flying leads Cable: Sensor/actuator cable, PVC, unshielded, 0.34 mm², 5.2 mm	2 m	YF2A15-020VB5X-LEAX	2096239
	Head A: female connector, M12, 5-pin, straight, A-coded Head B: Flying leads Cable: Sensor/actuator cable, PUR, halogen-free, unshielded, 0.34 mm², 4.8 mm	5 m	YF2A15-050UB5X-LEAX	2095618
	Head A: female connector, M12, 5-pin, straight, A-coded Head B: Flying leads Cable: Sensor/actuator cable, PVC, unshielded, 0.34 mm², 5.2 mm	5 m	YF2A15-050VB5X-LEAX	2096240
	Head A: female connector, M12, 5-pin, straight, A-coded Head B: Flying leads Cable: Sensor/actuator cable, PUR, halogen-free, unshielded, 0.34 mm², 4.8 mm	10 m	YF2A15-100UB5X-LEAX	2095619
	Head A: female connector, M12, 5-pin, straight, A-coded Head B: Flying leads Cable: Sensor/actuator cable, PVC, unshielded, 0.34 mm², 5.2 mm	10 m	YF2A15-100VB5X-LEAX	2096241
	Head A: female connector, M12, 8-pin, straight, A-coded Head B: Flying leads Cable: Sensor/actuator cable, PUR, halogen-free, unshielded, 0.25 mm², 5.8 mm	2 m	YF2A18-020UA5X-LEAX	2095652
		5 m	YF2A18-050UA5X-LEAX	2095653
		10 m	YF2A18-100UA5X-LEAX	2095654

[1] Tested detergent: P3-topactive DES, P3-topax 19, P3-topax 56, P3-topax 66 and P3-topax 99; Insulating material group: Cat I.

[2] Insulating material group: Cat I.

	Brief description	Length of cable	Type	Part no.
	Head A: female connector, M12, 8-pin, straight, A-coded Head B: Flying leads Cable: Sensor/actuator cable, PVC, shielded, 0.25 mm², 7 mm	2 m	YF2A28-020VA6X-LEAX	2096243
		5 m	YF2A28-050VA6X-LEAX	2096244
		10 m	YF2A28-100VA6X-LEAX	2096245
	Head A: female connector, M12, 5-pin, angled, A-coded Head B: Flying leads Cable: Sensor/actuator cable, PUR, halogen-free, unshielded, 0.34 mm², 4.8 mm	2 m	YG2A15-020UB5X-LEAX	2095772
	Head A: female connector, M12, 5-pin, angled, A-coded Head B: Flying leads Cable: Sensor/actuator cable, PVC, unshielded, 0.34 mm², 5.2 mm	2 m	YG2A15-020VB5X-LEAX	2096215
	Head A: female connector, M12, 5-pin, angled, A-coded Head B: Flying leads Cable: Sensor/actuator cable, PUR, halogen-free, unshielded, 0.34 mm², 4.8 mm	5 m	YG2A15-050UB5X-LEAX	2095773
	Head A: female connector, M12, 5-pin, angled, A-coded Head B: Flying leads Cable: Sensor/actuator cable, PVC, unshielded, 0.34 mm², 5.2 mm	5 m	YG2A15-050VB5X-LEAX	2096216
	Head A: female connector, M12, 5-pin, angled, A-coded Head B: Flying leads Cable: Sensor/actuator cable, PUR, halogen-free, unshielded, 0.34 mm², 4.8 mm	10 m	YG2A15-100UB5X-LEAX	2095774
	Head A: female connector, M12, 5-pin, angled, A-coded Head B: Flying leads Cable: Sensor/actuator cable, PVC, unshielded, 0.34 mm², 5.2 mm	10 m	YG2A15-100VB5X-LEAX	2096217
	Head A: female connector, M12, 8-pin, angled, A-coded Head B: Flying leads Cable: Sensor/actuator cable, PUR, halogen-free, unshielded, 0.25 mm², 5.8 mm	2 m	YG2A18-020UA5X-LEAX	2095779
		5 m	YG2A18-050UA5X-LEAX	2095780
		10 m	YG2A18-100UA5X-LEAX	2095781
	Head A: female connector, M12, 8-pin, angled, A-coded Head B: Flying leads Cable: Sensor/actuator cable, PVC, shielded, 0.25 mm², 7 mm	2 m	YG2A28-020VA6X-LEAX	2096218
		5 m	YG2A28-050VA6X-LEAX	2096219

[1] Tested detergent: P3-topactive DES, P3-topax 19, P3-topax 56, P3-topax 66 and P3-topax 99; Insulating material group: Cat I.

[2] Insulating material group: Cat I.

Further accessories

Spare parts

Brief description	Type	Part no.
Cover closed, material 1.4305	Cover closed	2067269

REGISTER AT WWW.SICK.COM TODAY AND ENJOY ALL THE BENEFITS

- Select products, accessories, documentation and software quickly and easily.
- Create, save and share personalized wish lists.
- View the net price and date of delivery for every product.
- Requests for quotation, ordering and delivery tracking made easy.
- Overview of all quotations and orders.
- Direct ordering: submit even very complex orders in moments.
- View the status of quotations and orders at any time. Receive e-mail notifications of status changes.
- Easily repeat previous orders.
- Conveniently export quotations and orders to work with your systems.

SERVICES FOR MACHINES AND SYSTEMS: SICK LifeTime Services

Our comprehensive and versatile LifeTime Services are the perfect addition to the comprehensive range of products from SICK. The services range from product-independent consulting to traditional product services.

Consulting and design
Safe and professional

Product and system support
Reliable, fast and on-site

Verification and optimization
Safe and regularly inspected

Upgrade and retrofits
Easy, safe and economical

Training and education
Practical, focused and professional

8020377/2019-04-16 · 9MS · Pre USmod en48

SICK AT A GLANCE

SICK is a leading manufacturer of intelligent sensors and sensor solutions for industrial applications. With more than 8,800 employees and over 50 subsidiaries and equity investments as well as numerous agencies worldwide, SICK is always close to its customers. A unique range of products and services creates the perfect basis for controlling processes securely and efficiently, protecting individuals from accidents, and preventing damage to the environment.

SICK has extensive experience in various industries and understands their processes and requirements. With intelligent sensors, SICK delivers exactly what the customers need. In application centers in Europe, Asia, and North America, system solutions are tested and optimized in accordance with customer specifications. All this makes SICK a reliable supplier and development partner.

Comprehensive services round out the offering: SICK LifeTime Services provide support throughout the machine life cycle and ensure safety and productivity.

That is "Sensor Intelligence."

Worldwide presence:

Australia, Austria, Belgium, Brazil, Canada, Chile, China, Czech Republic, Denmark, Finland, France, Germany, Great Britain, Hungary, Hong Kong, India, Israel, Italy, Japan, Malaysia, Mexico, Netherlands, New Zealand, Norway, Poland, Romania, Russia, Singapore, Slovakia, Slovenia, South Africa, South Korea, Spain, Sweden, Switzerland, Taiwan, Thailand, Turkey, United Arab Emirates, USA, Vietnam.

Detailed addresses and further locations → www.sick.com

SICK
Sensor Intelligence.