Drawings

digitalYEWFLO Series Vortex Flowmeter
Reduced Bore Type (/R1)
Integral / Remote, Flange
[DY025, DY040, DY050]

SD 01F06A00-09EN

Unit : mm
(approx. inch)

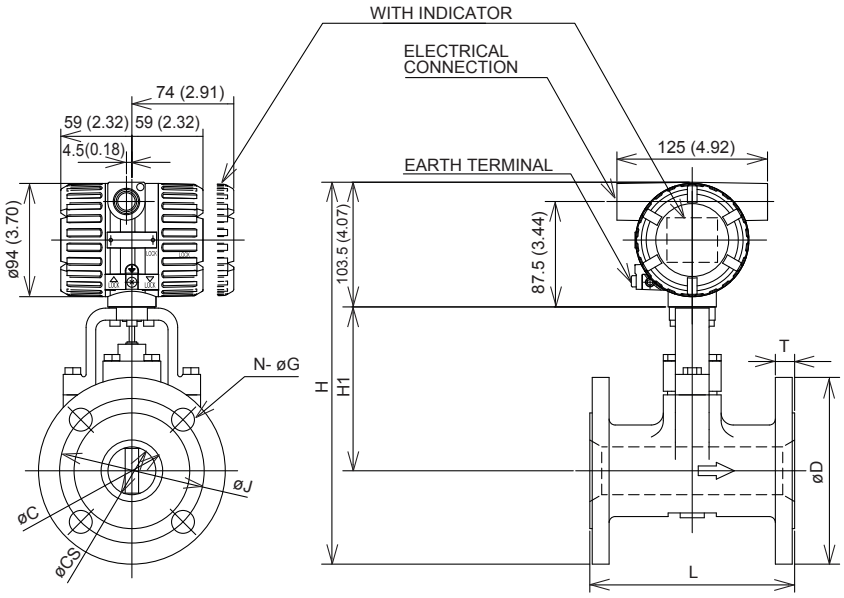

TYPE	INTEGRAL/REMOTE											
MODEL CODE	DY025/R1				DY040/R1				DY050/R1			
PROCESS CONNECTION	BJ1	BJ2	BA1 BS1	BA2 BS2	BJ1	BJ2	BA1 BS1	BA2 BS2	BJ1	BJ2	BA1 BS1	BA2 BS2
L	150 (5.91)				150 (5.90)				170 (6.69)			
C	25.7 (1.01)				39.7 (1.56)				51.1 (2.01)			
CS	14.6 (0.57)				25.7 (1.01)				39.7 (1.56)			
D	125 (4.92)	125 (4.92)	108 (4.25)	124 (4.88)	140 (5.51)	140 (5.51)	127 (5.00)	155.4 (6.12)	155 (6.10)	155 (6.10)	152.4 (6.00)	165.1 (6.50)
H	293 (11.54)	293 (11.54)	284.5 (11.20)	292.5 (11.52)	302.5 (11.91)	302.5 (11.91)	296 (11.65)	310 (12.20)	317 (12.48)	317 (12.48)	315.5 (12.42)	322 (12.68)
H1	127 (5.00)				129 (5.08)				136 (5.35)			
T	14 (0.55)	16 (0.63)	14.2 (0.56)	17.5 (0.69)	16 (0.63)	18 (0.71)	17.5 (0.69)	20.6 (0.81)	16 (0.63)	18 (0.71)	19.1 (0.75)	22.4 (0.88)
J	90 (3.54)	90 (3.54)	79.2 (3.12)	89 (3.50)	105 (4.13)	105 (4.13)	98.6 (3.88)	114.3 (4.5)	120 (4.72)	120 (4.72)	120.7 (4.75)	127 (5.00)
N	4				4				4	8	4	8
G	19 (0.75)	19 (0.75)	15.7 (0.62)	19 (0.75)	19 (0.75)	19 (0.75)	15.7 (0.62)	22.4 (0.88)	19 (0.75)	19 (0.75)	19 (0.75)	19 (0.75)
WEIGHT kg (lb)	6.1 (13.4)	6.5 (14.3)	5.5 (12.1)	7 (15.4)	9.5 (20.9)	10.1 (22.3)	9.4 (20.7)	12.6 (27.8)	10.5 (23.1)	11.1 (24.5)	11.4 (25.1)	13.6 (30.0)

(Note 1) Integral weight is the same as Remote.
(Note 2) In case of with Indicator, add 0.2kg.
(Note 3) The flow direction is opposite (right to left when facing onto indicator) in case of code/CRC.

Terminal Wiring

Integral Type (BRAIN or HART protocol)	SUPPLY +	Power Supply and 4 to 20mA DC Output Terminals
	SUPPLY –	
	PULSE +	Pulse Output Terminals
Integral Type (Foundation Fieldbus)	SUPPLY +	Fieldbus Communication Terminals
	SUPPLY –	
Remote Type Detector	T	Built-in Temperature Sensor Terminal
	A	Signal Output Terminals
	B	
	C	Common Terminal
	⏚	Grounding Terminal

* Use DYC signal cable for remote type.
* T is used for /MV only.

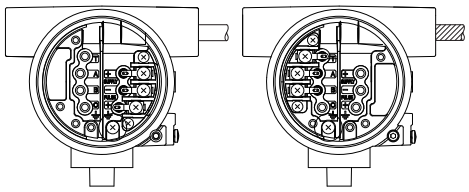

Integral type **Remote type**

YOKOGAWA ◆
Yokogawa Electric Corporation

All Rights Reserved, Copyright © 2000, Yokogawa Electric Corporation
Subject to change without notice. Printed in Japan.

SD 01F06A00-09EN
1st Edition: Feb. 1, 2006(YK)
7th Edition: May 21, 2018(KP)