PRODUCT INFORMATION

DLS40

SLIM AND COMPACT INCREMENTAL ENCODER THAT FITS MANY APPLICATIONS

Incremental Encoders

SICK
Sensor Intelligence.

SLIM AND COMPACT INCREMENTAL ENCODER THAT FITS MANY APPLICATIONS

Product description

The DLS40 incremental encoder is a reliable solution for measuring rotational speed and position. It has several unique features that redefine the way encoders work. The concept of a flange with integrated housing enables a slim, compact, and cost-efficient design. This allows easier installation, especially within tight spaces. In addition, the encoder has an easily accessible laser-marked QR code that provides direct access to the operating instructions.

At a glance

- Slim and compact design that fits almost every application
- Flange with integrated housing and top-cover design
- Pulses per revolution from 50 to 1,024
- Communication interfaces: TTL / RS-422, HTL / Push pull, and Open Collector
- Radial cable connection

Your benefits

- The compact design facilitates the integration of the encoder even where installation space is limited and helps reduce machine size
- The flange with integrated housing enables a very compact and cost-efficient design
- A wide variety of output signal options makes it easy to find the right solution for every application

Additional information

➜ www.sick.com/DLS40

For more information, simply enter the link or scan the QR code and get direct access to technical data, CAD design models, operating instructions, software, application examples, and much more.

8025881/2020-10-02
Subject to change without notice

Fields of application

A large range of applications for the measurement of speed and position, e.g. in

- Printing and packaging
- Paper processing
- Processing, forming and cutting of metal, wood and glass
- AGVs
- Manufacturing and filling of bottles
- Asynchronous motors
- Cable manufacturing

Detailed technical data

Performance

Pulses per revolution	0 ... 1024
Measuring step	90° electric/pulses per revolution
Duty cycle	≤ 0.5 ± 10 %

Interfaces

Communication interface	Incremental
Communication Interface detail	TTL / RS-422 HTL / Push pull Open Collector (depending on type)
Number of signal channels	
TTL / RS-422	6-channel
HTL / Push pull	3 channel
Open Collector	3 channel
Output frequency	≤ 150 kHz
Load current	≤ 30 mA
Power consumption	≤ 2 W (without load)

Electrical data

Connection type	Cable, 8-wire, radial, 2 m Cable, 5-wire, radial, 2 m (depending on type)
Supply voltage	4.5 V ... 5.5 V 10 V ... 27 V (depending on type)
Reference signal, number	1
Reverse polarity protection	✔
Short-circuit protection of the outputs	
4.5 V ... 5.5 V, TTL, RS-422	✔ [1]
10 V ... 27 V, HTL, Push pull	✔ [2]
10 V ... 27 V, Open Collector	✔ [2]
MTTFd: mean time to dangerous failure	600 years (EN ISO 13849-1) [3]

[1] Protection against short-curcuit rating to GND only. The short-circuit rating is only given if U_s and GND is connected correctly.

[2] Protection against short-curcuit rating to GND and U_S. The short-circuit rating is only given if U_s and GND are connected correctly.

[3] This product is a standard product and does not constitute a safety component as defined in the Machinery Directive. Calculation based on nominal load of components, average ambient temperature 40 °C, frequency of use 8760 h/a. All electronic failures are considered hazardous. For more information, see document no. 8015532.

Mechanical data

Mechanical design	Solid shaft, face mount flange
Shaft diameter	6 mm
Shaft length	12 mm
Weight	Approx. 130 g
Shaft material	Stainless steel
Flange material	Aluminum
Housing material	Aluminum
Material, cable	PVC
Start up torque	0.3 Ncm
Operating torque	0.2 Ncm
Permissible shaft loading radial/axial	40 N (radial) [1] 20 N (axial)
Operating speed	6,000 min^{-1} [2]
Maximum operating speed	≤ 8,000 min^{-1} [3]
Moment of inertia of the rotor	2.3 gcm^2
Bearing lifetime	2.0 x 10^9 revolutions
Angular acceleration	≤ 500,000 rad/s^2

[1] Higher values are possible using limited bearing life.
[2] Allow for self-heating of 1.3 K per 1,000 rpm when designing the operating temperature range.
[3] No permanent operation. Decreasing signal quality.

Ambient data

EMC	According to EN 61000-6-2 and EN 61000-6-3
Enclosure rating	IP50
Permissible relative humidity	90 % (condensation of the optical scanning not permitted)
Operating temperature range	–10 °C ... +70 °C
Storage temperature range	–25 °C ... +85 °C
Resistance to shocks	100 g, 6 ms (EN 60068-2-27)
Resistance to vibration	20 g, 10 Hz ... 2,000 Hz (EN 60068-2-6)

Type code

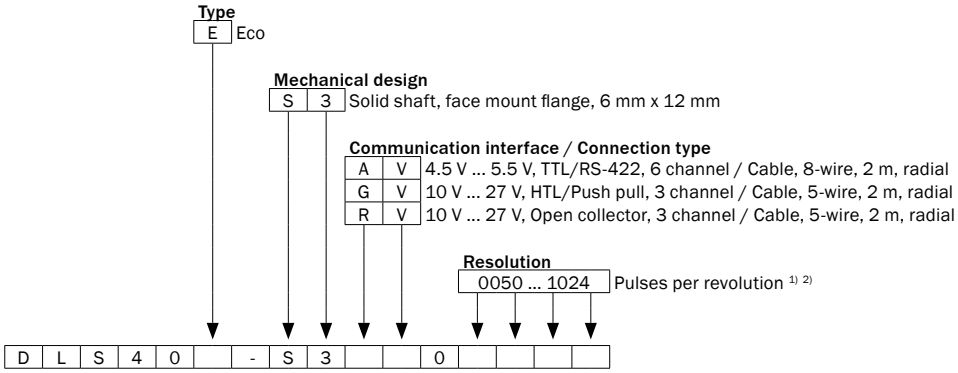

1) See table “Pulses per revolution”.
2) Other pulses upon request.

Pulses per revolution (other pulses upon request)

DLS40
50
60
100
200
360
400
500
600
1000
1024

Ordering information

- **Mechanical design:** Solid shaft, face mount flange
- **Shaft diameter:** 6 mm
- **Communication interface:** Incremental

Communication Interface detail	Supply voltage	Connection type	Pulses per revolution	Type	Part no.
HTL / Push pull	10 V ... 27 V	Cable, 5-wire, radial, 2 m	50	DLS40E-S3GV00050	1109600
			60	DLS40E-S3GV00060	1109601
			100	DLS40E-S3GV00100	1109602
			360	DLS40E-S3GV00360	1109612
			400	DLS40E-S3GV00400	1109604
			500	DLS40E-S3GV00500	1109605
			600	DLS40E-S3GV00600	1109611
			1,000	DLS40E-S3GV01000	1111788
			1,024	DLS40E-S3GV01024	1109606
Open Collector	10 V ... 27 V	Cable, 5-wire, radial, 2 m	360	DLS40E-S3RV00360	1112897
			400	DLS40E-S3RV00400	1109607
			500	DLS40E-S3RV00500	1109608
			600	DLS40E-S3RV00600	1111787
			1,000	DLS40E-S3RV01000	1112896
			1,024	DLS40E-S3RV01024	1109609
TTL / RS-422	4.5 V ... 5.5 V	Cable, 8-wire, radial, 2 m	200	DLS40E-S3AV00200	1109593
			360	DLS40E-S3AV00360	1109594
			400	DLS40E-S3AV00400	1109597
			500	DLS40E-S3AV00500	1109595
			600	DLS40E-S3AV00600	1109610
			1,000	DLS40E-S3AV01000	1112894

Dimensional drawings (Dimensions in mm (inch))

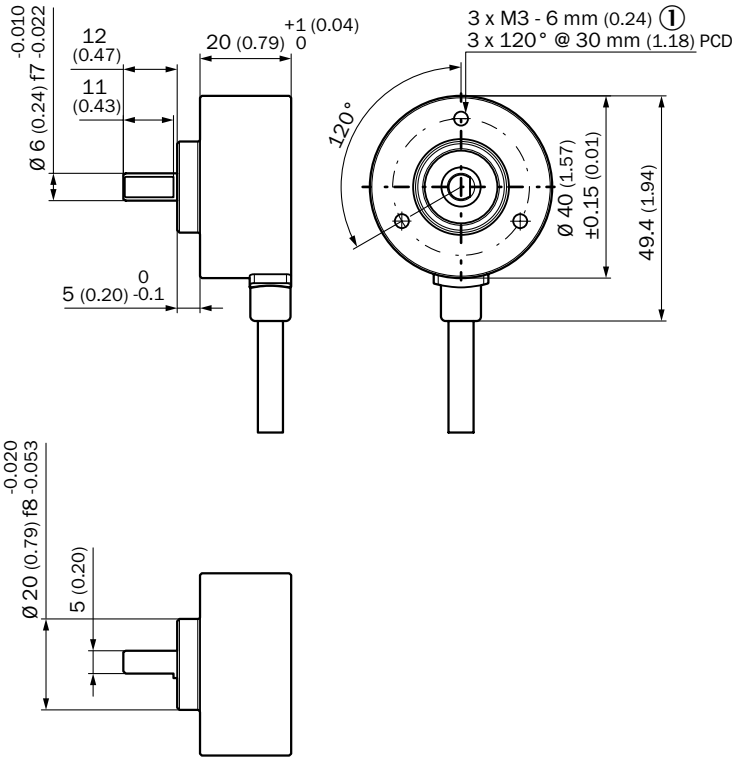

① Depth

PIN assignment

Wire colors (cable connection)	Signal	Description	Type
Brown	U_S	Supply voltage	DLS40E-*
Blue	GND	Ground connection	DLS40E-*
Black	A	Signal cable	DLS40E-*
White	B	Signal cable	DLS40E-*
Orange	Z	Signal cable	DLS40E-*
Red	A-	Signal cable	DLS40E-AV*
Gray	B-	Signal cable	DLS40E-AV*
Yellow	Z-	Signal cable	DLS40E-AV*

Zero pulse explanation

The Z and Z¯ pulse will appear when the flat surface of the shaft is aligned to the 9 o'clock position (when facing the encoder flange)

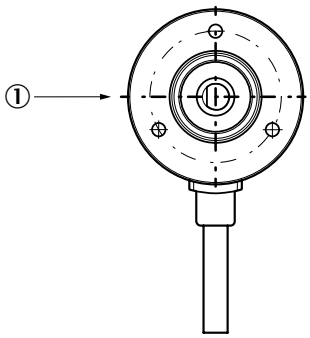

① Zero pulse mark on housing

On the back of the encoder, you can also find the position by looking for the mark

① Zero pulse mark on housing

Signal outputs

TTL/RS-422

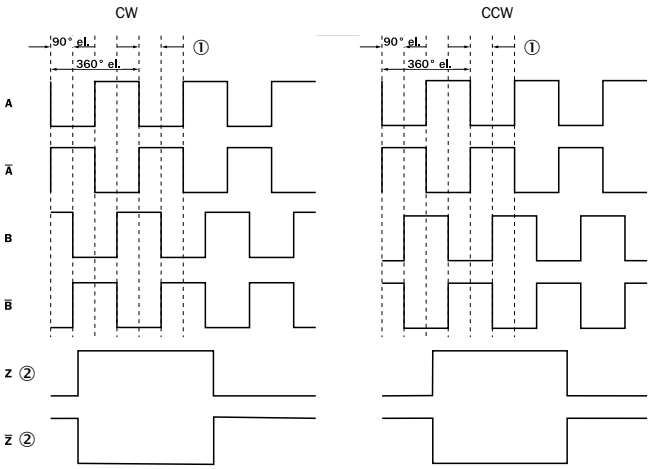

① Measuring step
② For reference only

HTL/Push pull

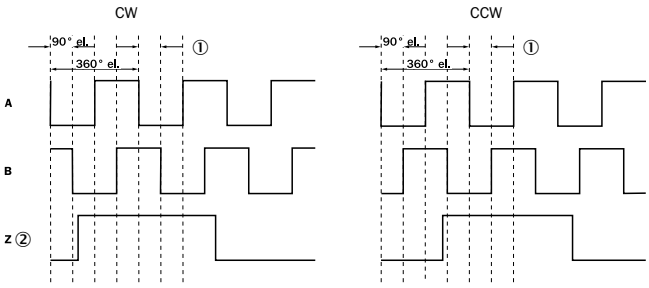

① Measuring step
② For reference only

Open Collector

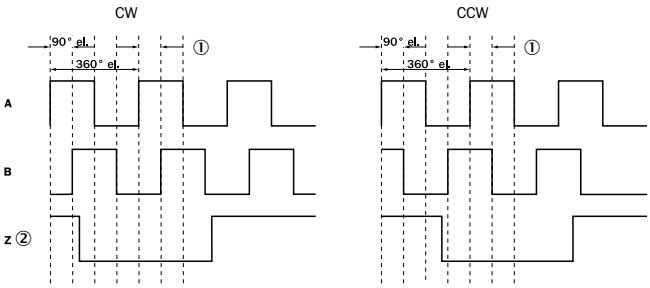

① Measuring step
② For reference only

Accessories

Mounting systems

Flanges

Flange plates

Figure	Brief description	Type	Part no.
	Flange adapter, adapts face mount flange with 20 mm centering collar to 33 mm servo flange, Aluminum	BEF-FA-020-033	2066312

Dimensional drawings ➜ page 12

Mounting brackets and plates

Mounting brackets

Figure	Brief description	Type	Part no.
	Mounting bracket for encoder with centering hub 20 mm, including mounting kit for face mount flange, mounting kit for face mount flange included	BEF-WF-20	2066393

Dimensional drawings ➜ page 12

Other mounting accessories

Measuring wheels and measuring wheel systems

Figure	Brief description	Type	Part no.
	Aluminium measuring wheel with O-ring (NBR70) for 6 mm solid shaft, circumference 200 mm	BEF-MR006020R	2055222
	Measuring wheel with O-ring (NBR70) for 6 mm solid shaft, circumference 300 mm	BEF-MR006030R	2055634
	Aluminium measuring wheel with O-ring (NBR70) for 6 mm solid shaft, circumference 500 mm	BEF-MR006050R	2055225
	Aluminum measuring wheel with cross-knurled surface for 6 mm solid shaft, circumference 200 mm	BEF-MR06200AK	4084745
	Aluminum measuring wheel with smooth polyurethane surface for 6 mm solid shaft, circumference 200 mm	BEF-MR06200AP	4084746
	Aluminum measuring wheel with ridged polyurethane surface for 6 mm solid shaft, circumference 200 mm	BEF-MR06200APG	4084748
	Aluminum measuring wheel with studded polyurethane surface for 6 mm solid shaft, circumference 200 mm	BEF-MR06200APN	4084747
	O-ring for measuring wheels (circumference 200 mm)	BEF-OR-053-040	2064061
	O-ring for measuring wheels (circumference 300 mm)	BEF-OR-083-050	2064076
	O-ring for measuring wheels (circumference 500 mm)	BEF-OR-145-050	2064074

Dimensional drawings ➜ page 12

Shaft adaptation

Shaft couplings

Figure	Brief description	Type	Part no.
	Bellows coupling, shaft diameter 6 mm / 6 mm, maximum shaft offset: radial ± 0.25 mm, axial ± 0.4 mm, angular +/- 4°; max. speed 10,000 rpm, –30 °C to +120 °C, max. torque 80 Ncm; material: stainless steel bellows, aluminum hub	KUP-0606-B	5312981

8025881/2020-10-02
Subject to change without notice

Figure	Brief description	Type	Part no.
	Bar coupling, shaft diameter 6 mm / 6 mm, maximum shaft offset: radial ± 0.3 mm, axial ± 0.2 mm, angle ± 3°; max. speed 10,000 rpm, –10° to +80 °C, max. torque 80 Ncm; material: fiber-glass reinforced polyamide, aluminum hub	KUP-0606-S	2056406
	Bar coupling, shaft diameter 6 mm /8 mm, maximum shaft offset radial ± 0.3 mm, axial ± 0.2 mm, angle ± 3°, max. speed 10,000 rpm, torsion spring rigidity 38 Nm/ wheel; material: fiber-glass reinforced polyamide, aluminum hub	KUP-0608-S	5314179
	Bellows coupling, shaft diameter 6 mm / 10 mm, maximum shaft offset: radial ± 0.25 mm, axial ± 0.4 mm, angular +/- 4°; max. speed 10,000 rpm, –30 °C to +120 °C, max. torque 80 Ncm; material: stainless steel bellows, aluminum hub	KUP-0610-B	5312982
	Double loop coupling, shaft diameter 6 mm / 10 mm, max. shaft offset: radially +/- 2,5 mm, axially +/-3 mm, angle +/- 10 degrees;max. speed 3.000 rpm, –30 to +80 degrees Celsius, torsional spring stiffness of 25 Nm/rad	KUP-0610-D	5326697
	Spring washer coupling, shaft diameter 6 mm / 10 mm, Maximum shaft offset: radial +/- 0.3 mm, axial +/- 0.4 mm, angular +/- 2.5°; max. speed 12,000 rpm, –10° to +80 °C, max. torque 60 Ncm; material: aluminum flange, glass fiber-reinforced polyamide membrane and hardened steel coupling pin	KUP-0610-F	5312985
	Bar coupling, shaft diameter 6 mm / 10 mm, max. shaft offset: radial ± 0,3 mm, axial ± 0,3 mm, angular ± 3°; max. speed 10.000 rpm, –10° to +80 °C, max. torque: 80 Ncm, material: fiber-glass reinforced polyamide, aluminum hub	KUP-0610-S	2056407

Dimensional drawings ➜ page 13

Dimensional drawings for accessories (Dimensions in mm (inch))

Flanges

BEF-FA-020-033

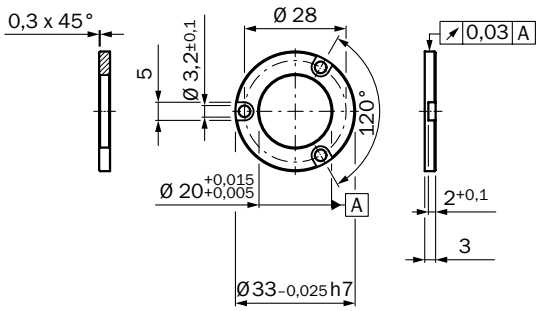

Mounting brackets and plates

BEF-WF-20

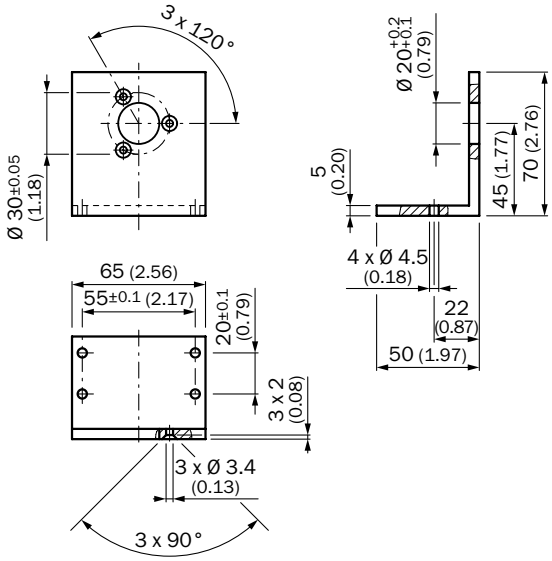

Other mounting accessories

BEF-MR006020R

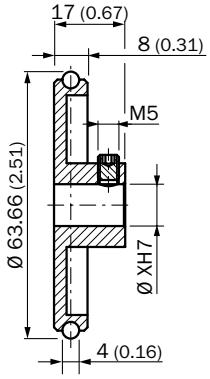

BEF-MR006030R

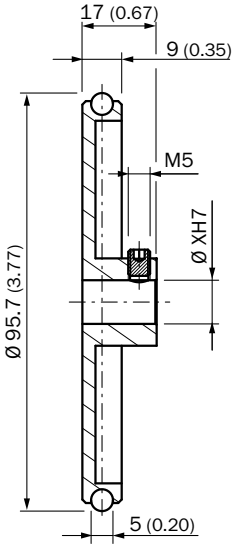

BEF-MR006050R

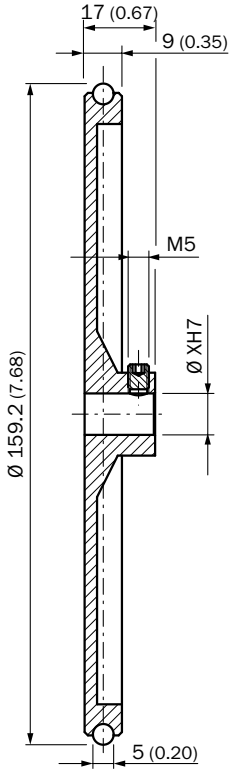

BEF-MR06200AK
BEF-MR06200AP
BEF-MR06200APG
BEF-MR06200APN

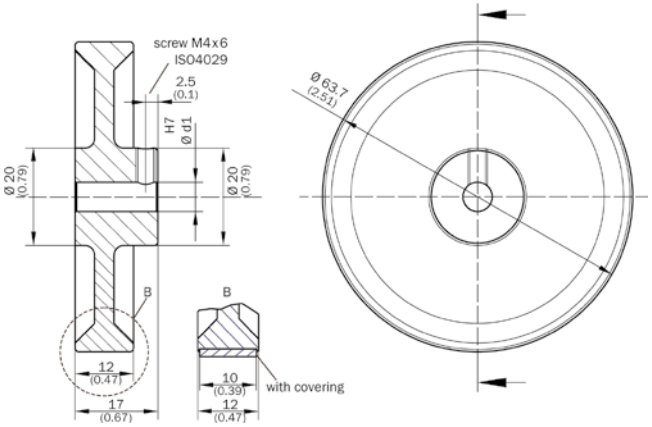

Shaft adaptation

KUP-06xx-B

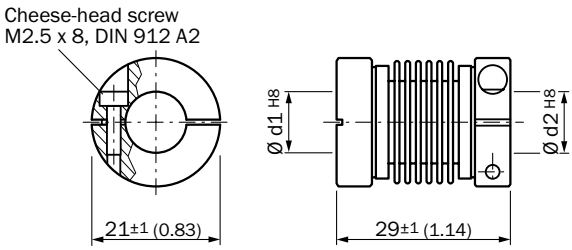

KUP-06xx-S

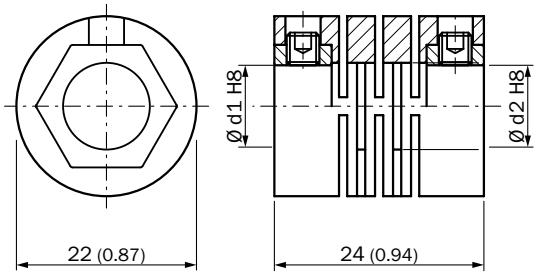

KUP-0608-S

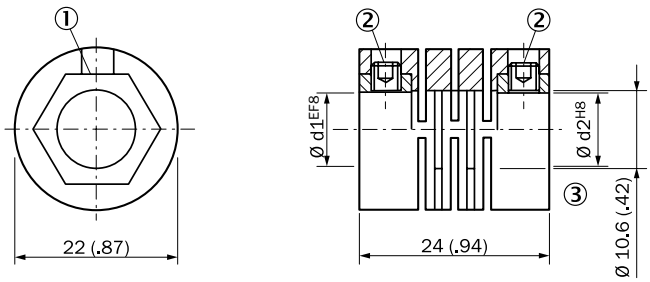

KUP-0610-D

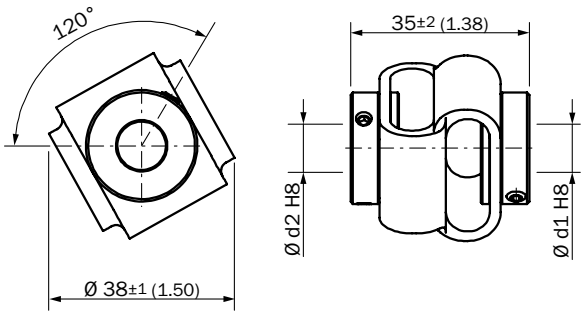

KUP-0610-F

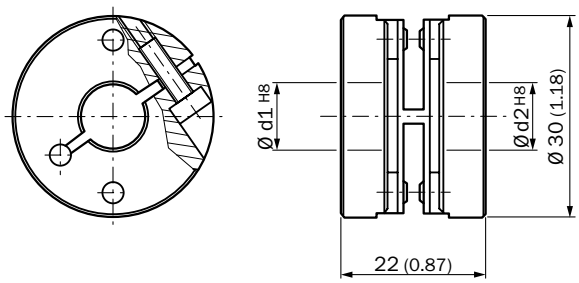

REGISTER AT WWW.SICK.COM TO TAKE ADVANTAGE OF OUR FOLLOWING SERVICES FOR YOU

- ☑ Access information on net prices and individual discounts.
- ☑ Easily order online and track your delivery.
- ☑ Check your history of all your orders and quotes.
- ☑ Create, save, and share as many wish lists as you want.
- ☑ Use the direct order to quickly order a big amount of products.
- ☑ Check the status of your orders and quotes and get information on status changes by e-mail.
- ☑ Save time by using past orders.
- ☑ Easily export orders and quotes, suited to your systems.

SERVICES FOR MACHINES AND PLANTS: SICK LifeTime Services

Our comprehensive and versatile LifeTime Services are the perfect addition to the comprehensive range of products from SICK. The services range from product-independent consulting to traditional product services.

Consulting and design
Safe and professional

Product and system support
Reliable, fast, and on-site

Verification and optimization
Safe and regularly inspected

Upgrade and retrofits
Easy, safe, and economical

Training and education
Practical, focused, and professional

8025881/2020-10-02 · LF_07 · Pre USmod en50

SICK AT A GLANCE

SICK is a leading manufacturer of intelligent sensors and sensor solutions for industrial applications. With more than 10,000 employees and over 50 subsidiaries and equity investments as well as numerous agencies worldwide, SICK is always close to its customers. A unique range of products and services creates the perfect basis for controlling processes securely and efficiently, protecting individuals from accidents, and preventing damage to the environment.

SICK has extensive experience in various industries and understands their processes and requirements. With intelligent sensors, SICK delivers exactly what the customers need. In application centers in Europe, Asia, and North America, system solutions are tested and optimized in accordance with customer specifications. All this makes SICK a reliable supplier and development partner.

Comprehensive services round out the offering: SICK LifeTime Services provide support throughout the machine life cycle and ensure safety and productivity.

That is "Sensor Intelligence."

Worldwide presence:

Australia, Austria, Belgium, Brazil, Canada, Chile, China, Czech Republic, Denmark, Finland, France, Germany, Great Britain, Hungary, Hong Kong, India, Israel, Italy, Japan, Malaysia, Mexico, Netherlands, New Zealand, Norway, Poland, Romania, Russia, Singapore, Slovakia, Slovenia, South Africa, South Korea, Spain, Sweden, Switzerland, Taiwan, Thailand, Turkey, United Arab Emirates, USA, Vietnam.

Detailed addresses and further locations → www.sick.com

SICK
Sensor Intelligence.